7107-R003-2_V

VSC1150.30
VSC1150.30I
VSC1150.30PLUS
VSC1150.30PLUSI
VSC1150.30DOUBLE
VSC1150.30DOUBLEI

LIST OF COMPONENTS

THE DIAGRAMS SERVE ONLY FOR THE IDENTIFICATION OF PARTS TO BE REPLACED. THE REPLACEMENT MUST BE CARRIED OUT PROFESSIONALLY QUALIFIED PERSONNEL.

PANZITTA SALES & SERVICE
72 George Avenue
Wilkes-Barre, PA 18705
570-822-6720 800-822-6720
www.panzittasales.com

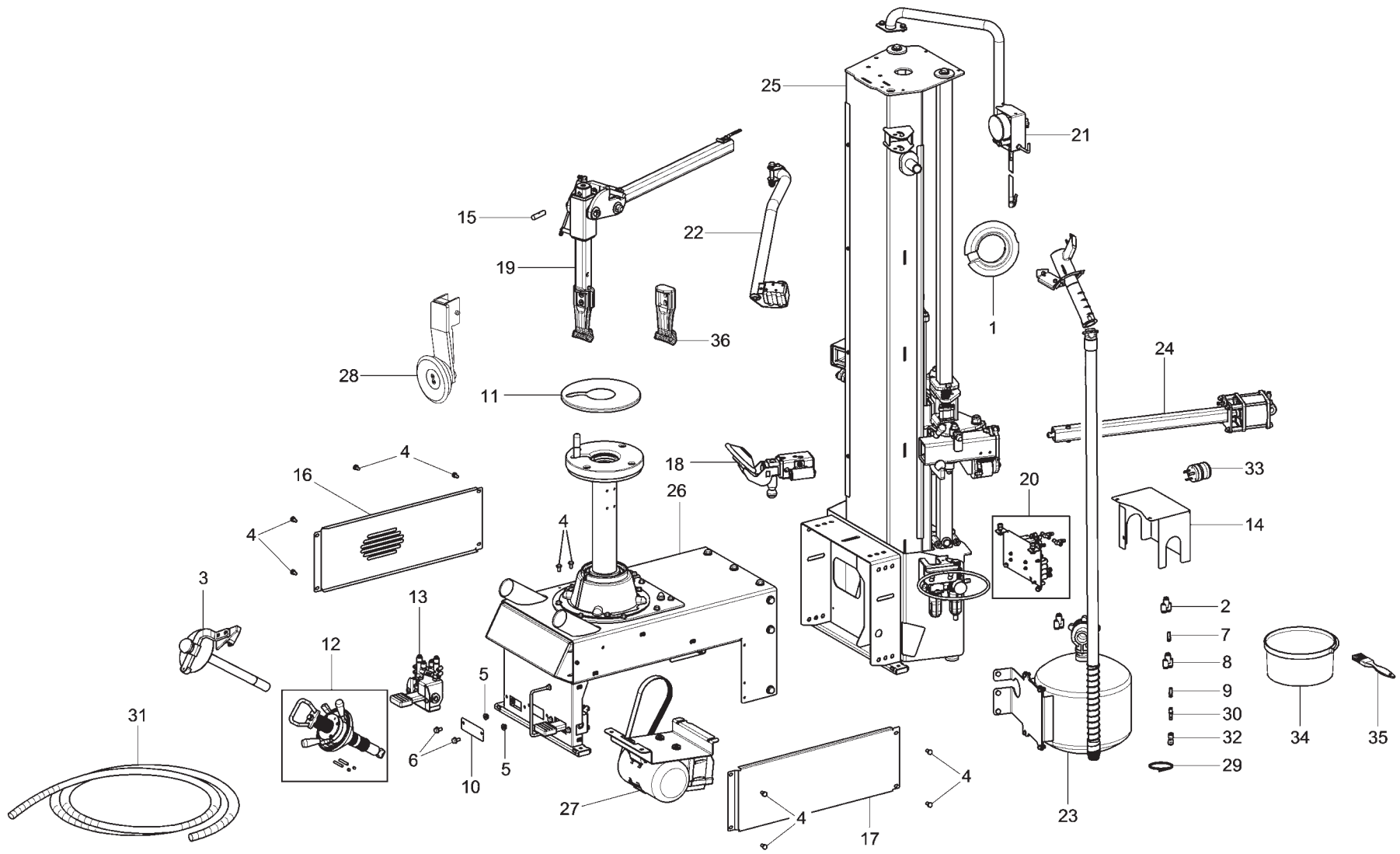

VSC1150.30	VSC1150.30I	VSC1150.30PLUS	VSC1150.30PLUSI	VSC1150.30DOUBLE	VSC1150.30DOUBLEI
•	•				

PANZITTA SALES & SERVICE
72 George Avenue
Wilkes-Barre, PA 18705
570-822-6720 800-822-6720
www.panzittasales.com

LISTA DEI COMPONENTI - LIST OF COMPONENTS - TEILELISTE
LISTE DES PIECES DETACHEES - LISTA DE PIEZAS

Tavola N°1 - Rev. 0

MAIN ASSEMBLY

PANZITTA SALES & SERVICE
72 George Avenue
Wilkes-Barre, PA 18705
570-822-6720 800-822-6720
www.panzittasales.com

LISTA DEI COMPONENTI - LIST OF COMPONENTS - TEILELISTE
LISTE DES PIECES DETACHEES - LISTA DE PIEZAS

MAIN ASSEMBLY

Tavola N°1 - Rev. 0

VSC1150.30	VSC1150.30I	VSC1150.30PLUS	VSC1150.30PLUSI	VSC1150.30DOUBLE	VSC1150.30DOUBLEI
●	●				

N°	Cod.	Descrizione	Description	Beschreibung	Description	Descripción
1	VSB1157000	Cono bifronte brunito	Burnished double-fronted cone	Zweigesichtiger brünierten Kegel	Cône deux-faces bruni	Cono bifronte pavonado
2	VSB5815000	Raccordo V 4	V 4 union	Verbindung V 4	Raccord V 4	Conector V 4
3	VS710090730	Trascinatore	Traction tool	Mitnehmer	Entraînement	Jalador
4	VS203031	VTE M8x14	TE M8x14 screw	Schraube TE M8x14	Vis TE M8x14	Tornillo TE M8x14
5	VS228501	Dado flangiato M8	M8 flanged nut	Flanschmutter M8	Écrou flangé M8	Tuerca rebordeado M8
6	VS272172	VTE M8x16	TE M8x16 screw	Schraube TE M8x16	Vis TE M8x16	Tornillo TE M8x16
7	VS325054	Riduzione 6-8	6-8 reduction	Reduktion 6-8	Reduction 6-8	Reducción 6-8
8	VS325191	Raccordo pneumatico	Pneumatic union	Pneumatischer Anschluss	Raccord pneumatique	Enlace neumático
9	VS325193	Raccordo adatt. 4/8	4/8 adapter union	Adapterverbindung 4/8	Raccord adapteur 4/8	Enlace adaptador 4/8
10	VS710011710	Mostrina	Plate	Platte	Plaquette	Plaquete
11	VS710013421	Protezione per ruote rovesce	Reverse wheels protection	Schutz für liegende Reifen	Protection pour roues renvesées	Protección para ruedas roversos
12	VSG1000A138	Kit bloccaggio per albero corto	Harness kit for short shaft	Sperrset für kurze Welle	Kit blocage pour arbre court	Kit bloqueo para eje corto
13	VS710690600	Gruppo pedaliera di gonfiaggio + NOI	Inflation pedalboard unit + NOI	Aufpumppedalleistesatz + NEINI	Groupe pédales de gonflage + NONI	Grupo pedalera inflado + NOI
	VS710690610	Gruppo pedaliera gonfiaggio (modello con gonfiatubeless)	Inflation pedalboard unit (version with tubeless inflation)	Aufpumppedalleistesatz (Modell mit Tubeless-Aufpumper)	Groupe pédales de gonflage (modèle avec gonfleur tubeless)	Grupo pedalera inflado (model con inflado tubeless)
14	VS710710960	Carter valvole	Valve guard	Ventilgehäuse	Carter vanne	Cárter válvula
15	VS710711650	Perno fermo braccio	Arm retaining pin	Armfeststellerzapfen	Pivot arrêt bras	Perno traba brazo
16	VS710712480	Carter sx	Lh guard	Linkes Gehäuse	Carter gauche	Cárter iz
17	VS710712680	Carter dx	Rh guard	Rechtes Gehäuse	Carter droit	Cárter d
18	VS710790011	Gruppo guida con rullo	Guide unit with roller	Führugsatz mit Rollen	Groupe guide avec rouleau	Grupo guía con rodillos
19	VS710790101	Gruppo braccio utensile	Tool arm unit	Armsatz Werkzeug	Groupe bras outil	Grupo brazo utensilio
20	VS710790110	Gruppo pneumatico + raccordi	Pneumatic unit + union	Pneumatischesatz + Anschluss	Groupe pneumatique + raccord	Grupo neumático + enlace
21	VS710790190	Gruppo supporto manometro	Pressure gauge support unit	Manometerträgersatz	Groupe support manomètre	Grupo soporte manómetro
22	VS710790210	Gruppo comandi	Controls unit	Befehlesatz	Groupe commandes	Grupo mandos
23	VS710790380	Gruppo IT ASME (modello con gonfiatubeless)	ASME IT unit (version with tubeless inflation)	IT ASME Satz (Modell mit Tubeless-Aufpumper)	Groupe IT ASME (modèle avec gonfleur tubeless)	Grupo IT ASME (model con inflado tubeless)
24	VS710790242	Gruppo braccio con cilindro	Arm unit with cylinder	Armsatz mit Zylinder	Groupe bras avec cylindre	Grupo brazo con cilindro
25	VS710790261	Gruppo colonna	Column unit	Säulesatz	Groupe colonne	Grupo columna
26	VS710790390	Gruppo basamento	Drive base unit	Untergestellsatz	Groupe bâti	Grupo base
27	VS710790430	Gruppo motore inverter	Inverter motor unit	Frequenumformer des Motorsatzes	Groupe moteur variateur	Grupo motor inversor
28	VSG1000A118	Rullo per matching (optional)	Roll for matching (optional)	Rolle für matching (optional)	Rouleau pour matching (option)	Rodillo para matching (opcional)
29	VSB0178000	Fascetta 3,6x142	3,6x142 hose clamp	Klemme 3,6x142	Collier 3,6x142	Abrazadera 3,6x142
30	VSB0171000	Raccordo riduzione fissa 6-4	6-4 Fixed reduction union	Feststehender Verjüngungsanschluss 6-4	Raccord reduction fixe 6-4	Conector reducción fijo 6-4
31	VS599561	Guaina	Sheath	Futteral	Gaine	Gaine
32	VSB0622000	Raccordo intermedio diritto D.8	D.8 right middle union	Rechtsmittelverbindung D.8	Raccord intérmediaire droit D.8	Conector intermedio derecho D.8
33	VS520169	Presa NEMA	NEMA intake	NEMA Ableitung	Prise NEMA	Ficha NEMA
34	VSG800A37	Pasta di montaggio	Mounting grease	Montagepaste	Graisse de montage	Grasa para montaje
35	VSG800A38	Pennello	Brush	Pinzel	Brosse	Pincel
36	VSG1000A117	Utensile superiore	Upper tool	Oberwerkzeug	Outil supérieur	Utensilio superior

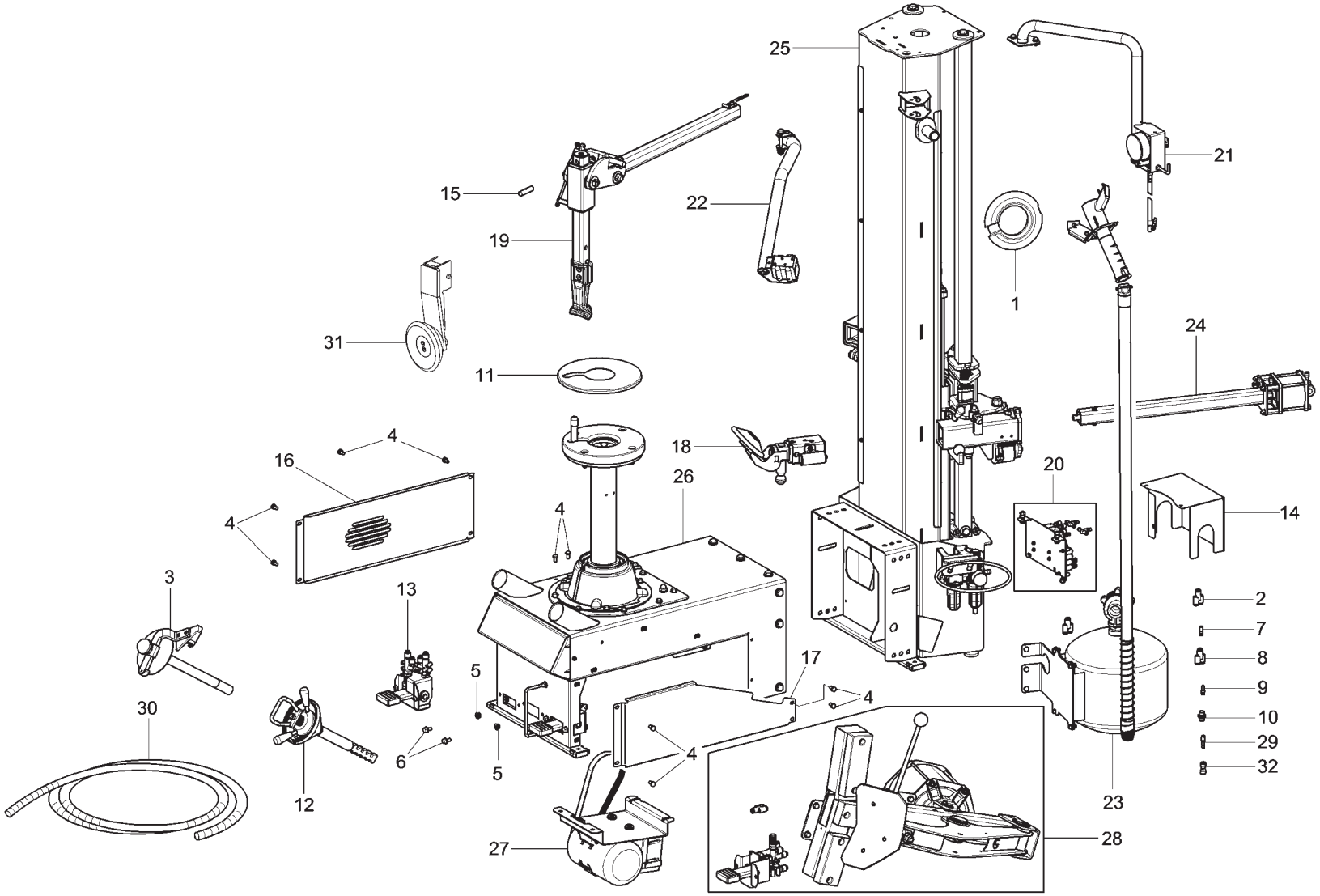

VSC1150.30	VSC1150.30I	VSC1150.30PLUS	VSC1150.30PLUSI	VSC1150.30DOUBLE	VSC1150.30DOUBLEI
		•	•		

PANZITTA SALES & SERVICE
72 George Avenue
Wilkes-Barre, PA 18705
570-822-6720 800-822-6720
www.panzittasales.com

LISTA DEI COMPONENTI - LIST OF COMPONENTS - TEILELISTE
LISTE DES PIECES DETACHEES - LISTA DE PIEZAS

Tavola N°2 - Rev. 2

MAIN ASSEMBLY

PANZITTA SALES & SERVICE
72 George Avenue
Wilkes-Barre, PA 18705
570-822-6720 800-822-6720
www.panzittasales.com

LISTA DEI COMPONENTI - LIST OF COMPONENTS - TEILELISTE
LISTE DES PIECES DETACHEES - LISTA DE PIEZAS

MAIN ASSEMBLY

Tavola N°2 - Rev. 2

VSC1150.30	VSC1150.30I	VSC1150.30PLUS	VSC1150.30PLUSI	VSC1150.30DOUBLE	VSC1150.30DOUBLEI
		●	●		

N°	Cod.	Descrizione	Description	Beschreibung	Description	Descripción
1	VSB1157000	Cono bifronte brunito	Burnished double-fronted cone	Zweigesichtiger brünierten Kegel	Cône deux-faces bruni	Cono bifronte pavonado
2	VSB5815000	Raccordo V 4	V 4 union	Verbindung V 4	Raccord V 4	Conector V 4
3	VS710090730	Trascinatore	Traction tool	Mitnehmer	Entraînement	Jalador
4	VS203031	VTE M8x14	TE M8x14 screw	Schraube TE M8x14	Vis TE M8x14	Tornillo TE M8x14
5	VS228501	Dado flangiato M8	M8 flanged nut	Flanschmutter M8	Écrou flangé M8	Tuerca rebordeado M8
6	VS272172	VTE M8x16	TE M8x16 screw	Schraube TE M8x16	Vis TE M8x16	Tornillo TE M8x16
7	VS325054	Riduzione 6-8	6-8 reduction	Reduktion 6-8	Reduction 6-8	Reducción 6-8
8	VS325191	Raccordo pneumatico	Pneumatic union	Pneumatischer Anschluss	Raccord pneumatique	Enlace neumático
9	VS325193	Raccordo adatt. 4/8	4/8 adapter union	Adapterverbindung 4/8	Raccord adapteur 4/8	Enlace adaptador 4/8
10	VS325225	Raccordo rapido a L	L rapid union	L-Schnellanschluss	Raccord rapide e+n L	Conector L rápido
11	VS710013421	Protezione per ruote rovesce	Reverse wheels protection	Schutz für liegende Reifen	Protection pour roues renvesées	Protección para ruedas roversos
12	VS710090223	Attacco rapido	Quick coupling	Schnellanschluss	Branchement rapid	Conexión rápida
13	VS710690600	Gruppo pedaliera di gonfiaggio + NOFI	Inflation pedalboard unit + NOFI	Aufpumppedalleistesatz + NEINFI	Groupe pédales de gonflage + NONFI	Grupo pedalera inflado + NOFI
	VS710690610	Gruppo pedaliera gonfiaggio (modello con gonfiatubeless)	Inflation pedalboard unit (version with tubeless inflation)	Aufpumppedalleistesatz (Modell mit Tubeless-Aufpumper)	Groupe pédales de gonflage (modèle avec gonfleur tubeless)	Grupo pedalera inflado (model con inflado tubeless)
14	VS710710960	Carter valvole	Valve guard	Ventilgehäuse	Carter vanne	Cárter válvula
15	VS710711650	Perno fermo braccio	Arm retaining pin	Armfeststellerzapfen	Pivot arrêt bras	Perno traba brazo
16	VS710712480	Carter sx	Lh guard	Linkes Gehäuse	Carter gauche	Cárter iz
17	VS710712490	Carter dx	Rh guard	Rechtes Gehäuse	Carter droit	Cárter d
18	VS710790011	Gruppo guida con rullo	Guide unit with roller	Führugsatz mit Rollen	Groupe guide avec rouleau	Grupo guía con rodillos
19	VS710790101	Gruppo braccio utensile	Tool arm unit	Armsatz Werkzeug	Groupe bras outil	Grupo brazo utensilio
20	VS710790110	Gruppo pneumatico + raccordi	Pneumatic unit + union	Pneumatischesatz + Anschluss	Groupe pneumatique + raccord	Grupo neumático + enlace
21	VS710790190	Gruppo supporto manometro	Pressure gauge support unit	Manometerträgersatz	Groupe support manomètre	Grupo soporte manómetro
22	VS710790210	Gruppo comandi	Controls unit	Befehlesatz	Groupe commandes	Grupo mandos
23	VS710790220	Gruppo IT EU Magic (modello con gonfiatubeless)	Magic IT EU unit (version with tubeless inflation)	IT EU Magic Satz (Modell mit Tubeless-Aufpumper)	Groupe IT EU Magic (modèle avec gonfleur tubeless)	Grupo IT EU Magic (model con inflado tubeless)
24	VS710790242	Gruppo braccio con cilindro	Arm unit with cylinder	Armsatz mit Zylinder	Groupe bras avec cylindre	Grupo brazo con cilindro
25	VS710790261	Gruppo colonna	Column unit	Säulesatz	Groupe colonne	Grupo columna
26	VS710790271	Gruppo basamento	Drive base unit	Untergestellsatz	Groupe bâti	Grupo base
27	VS710790290	Gruppo motore inverter	Inverter motor unit	Frequenumformer des Motorsatzes	Groupe moteur variateur	Grupo motor inversor
28	VS710790300	Gruppo stallonatore a terra	Bead breaker unit on ground level	Ebenerdiger Abdrücksatz	Groupe décolle-talon au sol	Grupo destalonador a nivel del suelo
29	VSB0171000	Raccordo riduzione fissa 6-4	6-4 Fixed reduction union	Feststehender Verjüngungsanschluss 6-4	Raccord reduction fixe 6-4	Conector reducción fijo 6-4
30	VS599561	Guaina	Sheath	Futteral	Gaine	Gaine
31	VSG1000A118	Rullo per matching (optional)	Roll for matching (optional)	Rolle für matching (optional)	Rouleau pour matching (option)	Rodillo para matching (opcional)
32	VSB0622000	Raccordo intermedio diritto D.8	D.8 right middle union	Rechtsmittelverbindung D.8	Raccord intérmediaire droit D.8	Conector intermedio derecho D.8

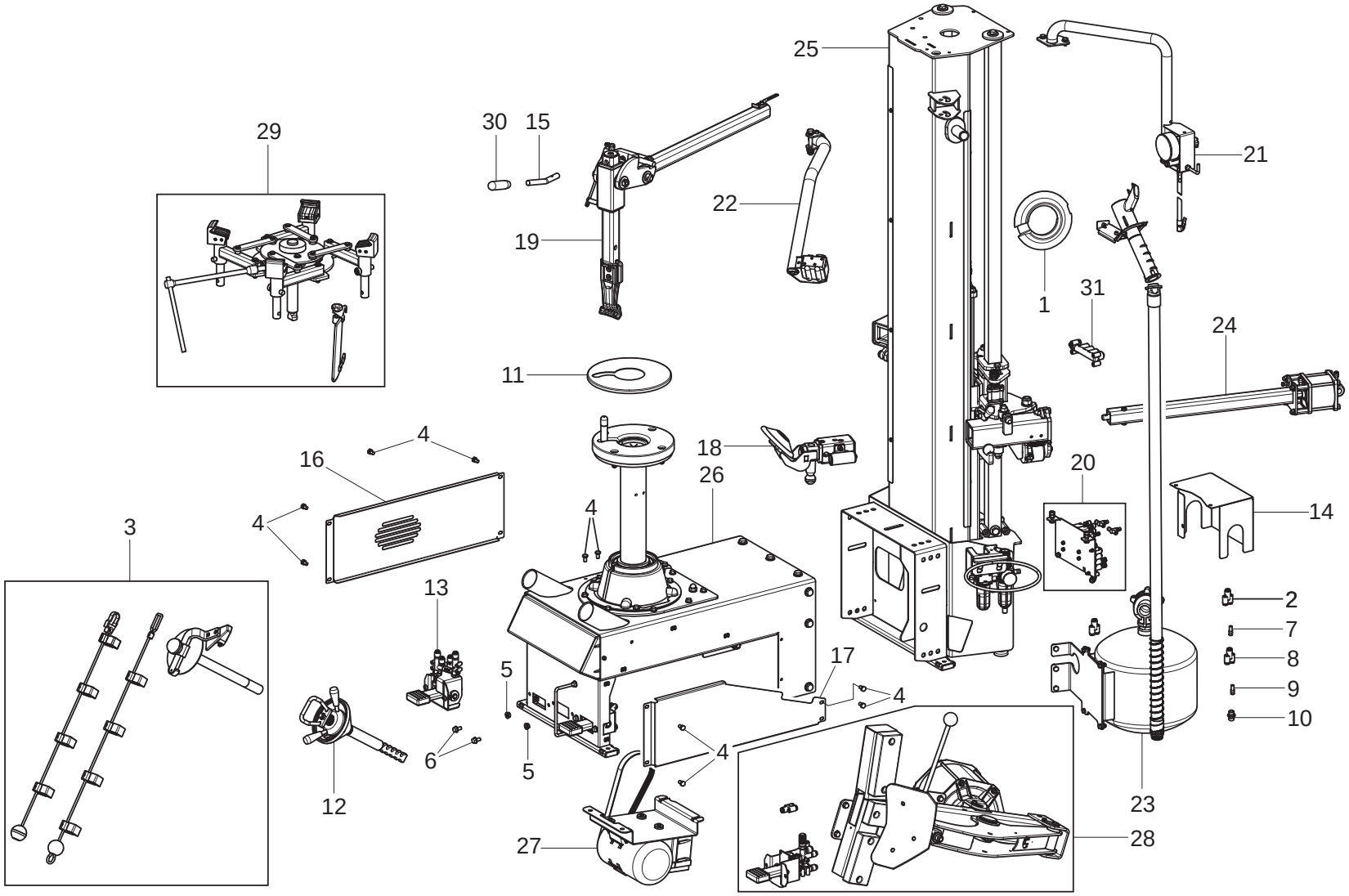

VSC1150.30	VSC1150.30I	VSC1150.30PLUS	VSC1150.30PLUSI	VSC1150.30DOUBLE	VSC1150.30DOUBLEI
				•	•

PANZITTA SALES & SERVICE
72 George Avenue
Wilkes-Barre, PA 18705
570-822-6720 800-822-6720
www.panzittasales.com

LISTA DEI COMPONENTI - LIST OF COMPONENTS - TEILELISTE
LISTE DES PIECES DETACHEES - LISTA DE PIEZAS

Tavola N°3 - Rev. 1

MAIN ASSEMBLY

PANZITTA SALES & SERVICE
72 George Avenue
Wilkes-Barre, PA 18705
570-822-6720 800-822-6720
www.panzittasales.com

LISTA DEI COMPONENTI - LIST OF COMPONENTS - TEILELISTE
LISTE DES PIECES DETACHEES - LISTA DE PIEZAS

Tavola N°3 - Rev. 1

MAIN ASSEMBLY

VSC1150.30	VSC1150.30I	VSC1150.30PLUS	VSC1150.30PLUSI	VSC1150.30DOUBLE	VSC1150.30DOUBLEI
				●	●

N°	Cod.	Descrizione	Description	Beschreibung	Description	Descripción
1	VSB1157000	Cono bifronte brunito	Burnished double-fronted cone	Zweigesichtiger brünierten Kegel	Cône deux-faces bruni	Cono bifronte pavonado
2	VSB5815000	Raccordo V 4	V 4 union	Verbindung V 4	Raccord V 4	Conector V 4
3	VSG1000A67	Premitallone 28" c/trazione	Bead depressing 28" with entrainer	Wulstabdrückervorrichtung mit Führungspin	Pousse-talon avec galet	Presionatalón con transportador
4	VS203031	VTE M8x14	TE M8x14 screw	Schraube TE M8x14	Vis TE M8x14	Tornillo TE M8x14
5	VS228501	Dado flangiato M8	M8 flanged nut	Flanschmutter M8	Écrou flangé M8	Tuerca rebordeado M8
6	VS272172	VTE M8x16	TE M8x16 screw	Schraube TE M8x16	Vis TE M8x16	Tornillo TE M8x16
7	VS325054	Riduzione 6-8	6-8 reduction	Reduktion 6-8	Reduction 6-8	Reducción 6-8
8	VS325191	Raccordo pneumatico	Pneumatic union	Pneumatischer Anschluss	Raccord pneumatique	Enlace neumático
9	VS325193	Raccordo adatt. 4/8	4/8 adapter union	Adapterverbindung 4/8	Raccord adapteur 4/8	Enlace adaptador 4/8
10	VS325225	Raccordo rapido a L	L rapid union	L-Schnellanschluss	Raccord rapide e+n L	Conector L rápido
11	VS710013421	Protezione per ruote rovesce	Reverse wheels protection	Schutz für liegende Reifen	Protection pour roues renvesées	Protección para ruedas roversos
12	VS710090223	Attacco rapido	Quick coupling	Schnellanschluss	Branchement rapid	Conexión rápida
13	VS710690610	Gruppo pedaliera gonfiaggio	Inflation pedalboard unit	Aufpumppedalleistesatz	Groupe pédales de gonflage	Grupo pedalera inflado
14	VS710710960	Carter valvole	Valve guard	Ventilgehäuse	Carter vanne	Cárter válvula
15	VS710712670	Maniglia	Handle	Griff	Poignée	Manija
16	VS710712480	Carter sx	Lh guard	Linkes Gehäuse	Carter gauche	Cárter iz
17	VS710712490	Carter dx	Rh guard	Rechtes Gehäuse	Carter droit	Cárter d
18	VS710790010	Gruppo guida con rullo	Guide unit with roller	Führugsatz mit Rollen	Groupe guide avec rouleau	Grupo guía con rodillos
19	VS710790101	Gruppo braccio utensile	Tool arm unit	Armsatz Werkzeug	Groupe bras outil	Grupo brazo utensilio
20	VS710790110	Gruppo pneumatico + raccordi	Pneumatic unit + union	Pneumatischesatz + Anschluss	Groupe pneumatique + raccord	Grupo neumático + enlace
21	VS710790190	Gruppo supporto manometro	Pressure gauge support unit	Manometerträgersatz	Groupe support manomètre	Grupo soporte manómetro
22	VS710790210	Gruppo comandi	Controls unit	Befehlesatz	Groupe commandes	Grupo mandos
23	VS710790220	Gruppo IT EU Magic	Magic IT EU unit	IT EU Magic Satz	Groupe IT EU Magic	Grupo IT EU Magic
24	VS710790241	Gruppo braccio con cilindro	Arm unit with cylinder	Armsatz mit Zylinder	Groupe bras avec cylindre	Grupo brazo con cilindro
25	VS710790260	Gruppo colonna	Column unit	Säulesatz	Groupe colonne	Grupo columna
26	VS710790270	Gruppo basamento	Drive base unit	Untergestellsatz	Groupe bâti	Grupo base
27	VS710790290	Gruppo motore inverter	Inverter motor unit	Frequenumformer des Motorsatzes	Groupe moteur variateur	Grupo motor inversor
28	VS710790300	Gruppo stallonatore a terra	Bead breaker unit on ground level	Ebenerdiger Abdrücksatz	Groupe décolle-talon au sol	Grupo destalonador a nivel del suelo
29	VSG1000A125	Dispositivo bloccaggio ruote moto	Locking device for motorbike wheels	Sperrvorrichtung für Motorrad Räder	Dispositif de blocage roues moto	Dispositivo de bloqueo ruedas moto
30	VS903078	Manopola a pressione	Pressure knob	Pressionknopf	Poignée à pression	Pomo a presión
31	VSB285000	Blocchetto a 5 vie	5-way block	Blöckchen 5 Weg	Petit block à 5 voies	Bloquecillo a 5 vias

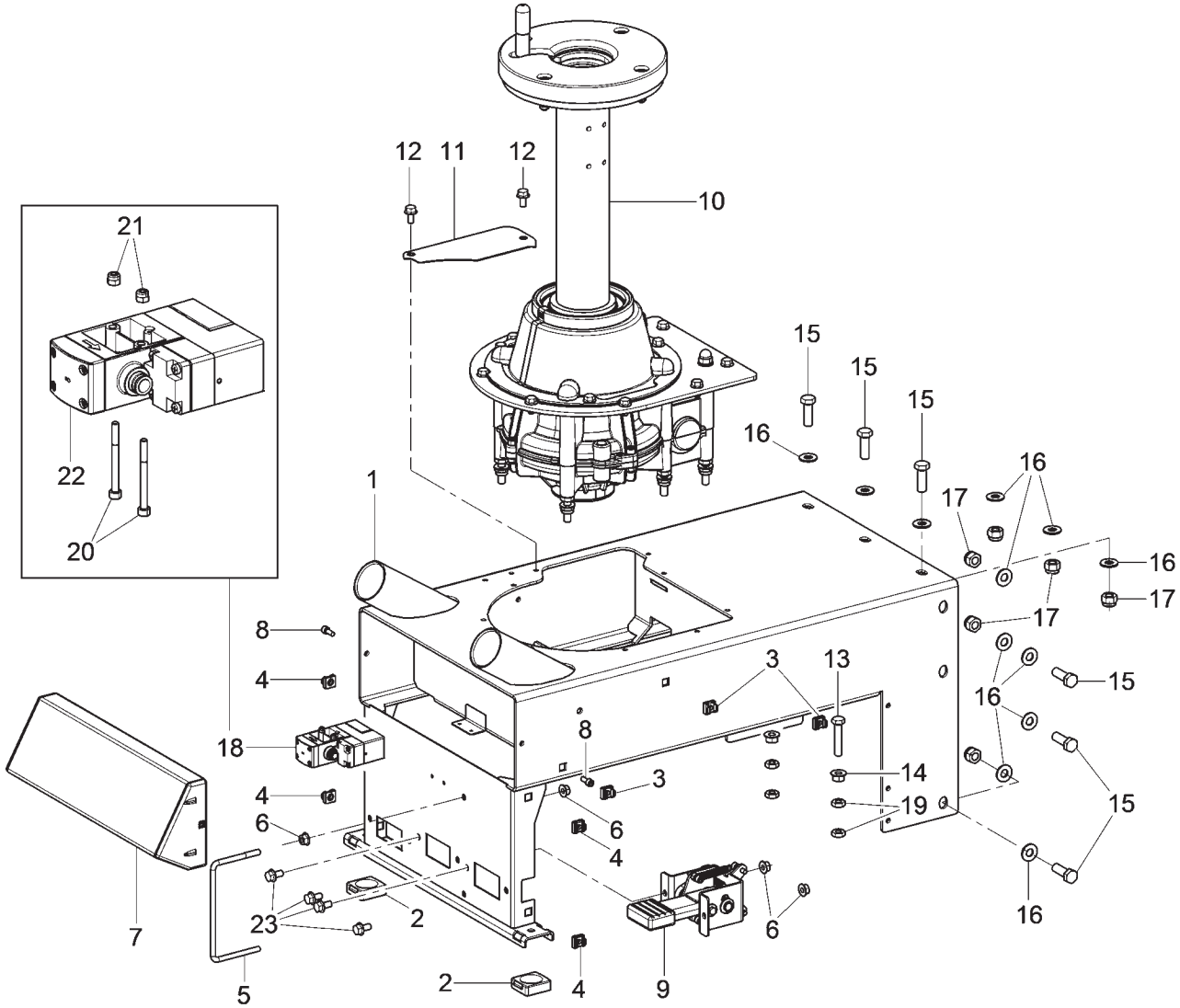

VSC1150.30	VSC1150.30I	VSC1150.30PLUS	VSC1150.30PLUSI	VSC1150.30DOUBLE	VSC1150.30DOUBLEI
•	•	•	•	•	•

PANZITTA SALES & SERVICE
72 George Avenue
Wilkes-Barre, PA 18705
570-822-6720 800-822-6720
www.panzittasales.com

LISTA DEI COMPONENTI - LIST OF COMPONENTS - TEILELISTE
LISTE DES PIECES DETACHEES - LISTA DE PIEZAS

Tavola N°4 - Rev. 0 | **VS710790390**

DRIVE BASE UNIT

7107-R003-2_V

PANZITTA SALES & SERVICE
72 George Avenue
Wilkes-Barre, PA 18705
570-822-6720 800-822-6720
www.panzittasales.com

LISTA DEI COMPONENTI - LIST OF COMPONENTS - TEILELISTE
LISTE DES PIECES DETACHEES - LISTA DE PIEZAS

DRIVE BASE UNIT

Tavola N°4 - Rev. 0 | **VS710790390**

VSC1150.30	VSC1150.30I	VSC1150.30PLUS	VSC1150.30PLUSI	VSC1150.30DOUBLE	VSC1150.30DOUBLEI
●	●	●	●	●	●

N°	Cod.	Descrizione	Description	Beschreibung	Description	Descripción
1	VS710712590	*Insieme telaio*	*Frame assembly*	*Rahmensatz*	*Assemblage chassis*	*Ensamblado chasis*
2	VSB2528000	*Piede in gomma*	*Rubber foot*	*Gummifuss*	*Pied en caoutchouc*	*Pié de goma*
3	VSB3124000	*Dado in gabbia M8*	*M8 crated nut*	*Mutter im Käfig M8*	*Écrou en cage M8*	*Tuerca en jaula M8*
4	VS228251	*Dado in gabbia M8*	*M8 crated nut*	*Mutter im Käfig M8*	*Écrou en cage M8*	*Tuerca en jaula M8*
5	VSB3055000	*Divisoria pedali*	*Pedal partition*	*Trennpedalen*	*Diviseur pédales*	*Divisor pedales*
6	VS228501	*Dado flangiato M8*	*M8 flanged nut*	*Flanschmutter M8*	*Écrou flangé M8*	*Tuerca rebordeado M8*
7	VS710210970	*Carter anteriore C*	*C Front guard*	*Vorderes Gehäuse C*	*Carter antérieur C*	*Cárter anterior C*
8	VS206019	*VTCEI M6x16*	*TCEI M6x16 screw*	*Schraube TCEI M6x16*	*Vis TCEI M6x16*	*Tornillo TCEI M6x16*
9	VS710490401	*Pedaliera per inverter*	*Pedalboard for inverter*	*Pedalleiste für Inverter*	*Pédales de direction pour inverseur*	*Pedalera para inverter*
10	VS710591341	*Gruppo autocentrante*	*Selfcentering chuck unit*	*Autozentrieresatz*	*Groupe autocentreur*	*Grupo autocentrante*
11	VS710515690	*Chiusura cinghia*	*Belt closing*	*Riemen Verschluss*	*Fermerture courroie*	*Cerrado correa*
12	VS272172	*VTE M8x16*	*TE M8x16 screw*	*Schraube TE M8x16*	*Vis TE M8x16*	*Tornillo TE M8x16*
13	VS203108	*VTE M10x55*	*TE M10x55 screw*	*Schraube TE M10x55*	*Vis TE M10x55*	*Tornillo TE M10x55*
14	VS228502	*Dado flangiato M10*	*M10 flange nut*	*Flanschmutter M10*	*Écrou flangé M10*	*Tuerca rebordeado M10*
15	VS203074	*VTE M12x35*	*TE M12x35 screw*	*Schraube TE M12x35*	*Vis TE M12x35*	*Tornillo TE M12x35*
16	VS237025	*Rondella piana 12x25x2,5*	*12x25x2,5 flat washer*	*Ebene Scheibe 12x25x2,5*	*Rondelle plane 12x25x2,5*	*Arandela plana 12x25x2,5*
17	VS228006	*Dado autobloccante M12*	*M12 self-locking nut*	*Mutter selbstsperrend M12*	*Écrou auto-bloquant M12*	*Tuerca autoblocante M12*
18	VS790090730	*Gruppo valvola 60PSI*	*60PSI valve group*	*Ventilsatz 60PSI*	*Groupe vanne 60PSI*	*Grupo válvula 60PSI*
19	VS226011	*Dado es.basso M10*	*M10 low hexagonal nut*	*Untere sechswinkling Mutter M10*	*Écrou hexagonal bas M10*	*Tuerca hexagonal bajo M10*
20	VS206360	*VTCEI M4x45*	*TCEI M4x45 screw*	*Schraube TCEI M4x45*	*Vis TCEI M4x45*	*Tornillo TCEI M4x45*
21	VS228023	*Dado autobloccante M4*	*M4 self-locking nut*	*Mutter selbstsperrend M4*	*Écrou auto-bloquant M4*	*Tuerca autoblocante M4*
22	VS790090720	*Valvola bilanciatrice 60PSI*	*60 PSI balancing valve*	*Ventil Waage 60 PSI*	*Vanne balancement 60 PSI*	*Válvula balanceo 60 PSI*
23	VSB1367300	*VTBEI M8x16*	*TBEI M8x16 screw*	*Schraube TBEI M8x16*	*Vis TBEI M8x16*	*Tornillo TBEI M8x16*

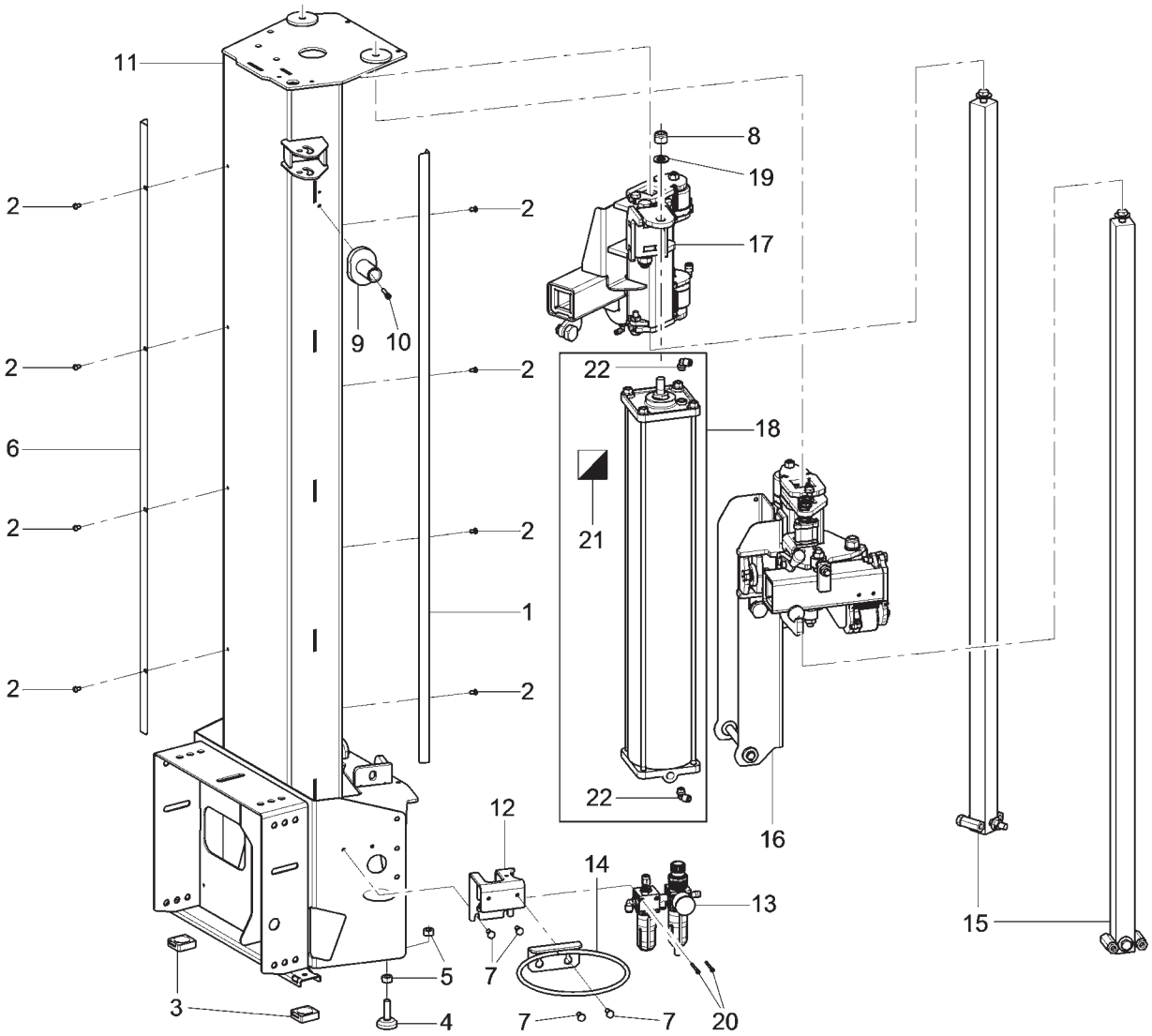

VSC1150.30	VSC1150.30I	VSC1150.30PLUS	VSC1150.30PLUSI	VSC1150.30DOUBLE	VSC1150.30DOUBLEI
•	•	•	•	•	•

PANZITTA SALES & SERVICE
72 George Avenue
Wilkes-Barre, PA 18705
570-822-6720 800-822-6720
www.panzittasales.com

LISTA DEI COMPONENTI - LIST OF COMPONENTS - TEILELISTE
LISTE DES PIECES DETACHEES - LISTA DE PIEZAS

Tavola N°5 - Rev. 1 | **VS710790261**

COLUMN UNIT

7107-R003-2_V

PANZITTA SALES & SERVICE
72 George Avenue
Wilkes-Barre, PA 18705
570-822-6720 800-822-6720
www.panzittasales.com

LISTA DEI COMPONENTI - LIST OF COMPONENTS - TEILELISTE
LISTE DES PIECES DETACHEES - LISTA DE PIEZAS

COLUMN UNIT

Tavola N°5 - Rev. 1 | **VS710790261**

VSC1150.30	VSC1150.30I	VSC1150.30PLUS	VSC1150.30PLUSI	VSC1150.30DOUBLE	VSC1150.30DOUBLEI
●	●	●	●	●	●

N°	Cod.	Descrizione	Description	Beschreibung	Description	Descripción
1	VS710710680	Lamierino anti-usura	Anti-wear plate	Anti-Abrieb Blech	Tôle anti-usure	Chapa antidesgaste
2	VS271012	VTBEI M6x10	TBEI M6x10 screw	Schraube TBEI M6x10	Vis TBEI M6x10	Tornillo TBEI M6x10
3	VSB2528000	Piede in gomma	Rubber foot	Gummifuss	Pied en caoutchouc	Pié de goma
4	VSB0013000	Piede in gomma	Rubber-made feet	Gummifuss	Pied en caoutchouc	Pié en goma
5	VS224015	Dado esagonale medio M12	M12 middle hexagonal nut	Mittlere sechswinkling Mutter M12	Écrou hexagonal moyen M12	Tuerca hexagonal medio M12
6	VS710511070	Lamierino anti-usura sx	Lh anti-wear plate	L Anti-Abrieb Blech	Tôle anti-usure g	Chapa antidesgaste iz
7	VS203172	VTE M8x16	TE M8x16 screw	Schraube TE M8x16	Vis TE M8x16	Tornillo TE M8x16
8	VS228013	Dado autobloccante M16	M16 self-locking nut	Mutter selbstsperrend M16	Écrou auto-bloquant M16	Tuerca autoblocante M16
9	VS129311670	Piolo	Stake	Haken	Pieu	Barrote
10	VS206128	VTCEI M6x30	TCEI M6x30 screw	Schraube TCEI M6x30	Vis TCEI M6x30	Tornillo TCEI M6x30
11	VS710712400	Insieme colonna	Column assembly	Säulesatz	Assemblage colonne	Conjunto columna
12	VSB4191901	Supporto filtro	Filter support	Filterhalterung	Support filtre	Soporte filtro
13	VS710690480	Gruppo trattamento aria	Air treatment unit	Aufbereitungluftsatz	Groupe traitement air	Grupo tratamiento aire
14	VSB0223000	Anello contenitore grasso	Grease holding ring	Fettführungsring	Anneau cuve porte-graisse	Anillo porta grasa
15	VS710790180	Gruppo quadro con esagoni	Panel unit with hexagons	Satztafel mit Sechskanten	Groupe tableau avec hexagones	Grupo cuadro con hexagónos
16	VS710790021	Gruppo supporto braccio	Arm support unit	Armträgersatz	Groupe support bras	Grupo soporte brazo
17	VS710790030	Gruppo doppia guida	Double guide unit	Doppelte Führungsatz	Groupe double guide	Grupo doble guía
18	VS710790170	Cilindro pneumatico D.125	D.125 pneumatic cylinder	Pneumatikzylinder D.125	Cylindre pneumatique D.125	Cilindro neumático D.125
19	VS236020	Rondella piana 17	17 flat washer	Ebene Scheibe 17	Rondelle plane 17	Arandela plana 17
20	VS206234	VTCEI M4x40	TCEI M4x40 screw	Schraube TCEI M4x40	Vis TCEI M4x40	Tornillo TCEI M4x40
21	VSGU4940	Kit guarnizione cilindro D.125	Cylinder gasket kit D.125	Zylinderdichtungenset D.125	Kit joint cylindre D.125	Kit junta cilindro D.125
22	VS325118	Raccordo girevole	Swivel coupling	Drehbarer Anschluss	Raccord pivotant	Conector girable

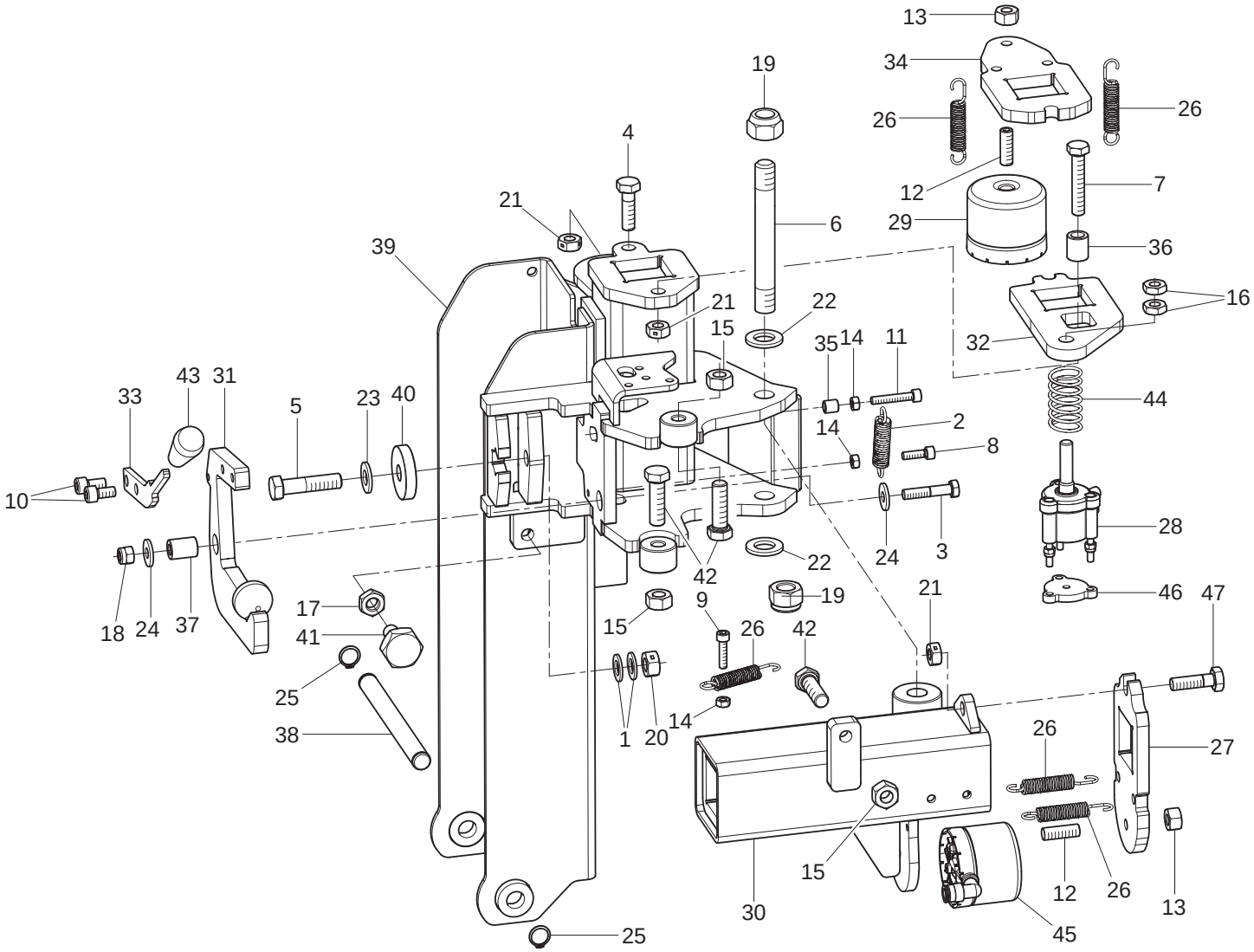

VSC1150.30	VSC1150.30I	VSC1150.30PLUS	VSC1150.30PLUSI	VSC1150.30DOUBLE	VSC1150.30DOUBLEI
•	•	•	•	•	•

PANZITTA SALES & SERVICE
72 George Avenue
Wilkes-Barre, PA 18705
570-822-6720 800-822-6720
www.panzittasales.com

LISTA DEI COMPONENTI - LIST OF COMPONENTS - TEILELISTE
LISTE DES PIECES DETACHEES - LISTA DE PIEZAS

Tavola N°6 - Rev. 1 | **VS710790021**

ARM SUPPORT UNIT

7107-R003-2_V

PANZITTA SALES & SERVICE
72 George Avenue
Wilkes-Barre, PA 18705
570-822-6720 800-822-6720
www.panzittasales.com

LISTA DEI COMPONENTI - LIST OF COMPONENTS - TEILELISTE
LISTE DES PIECES DETACHEES - LISTA DE PIEZAS

ARM SUPPORT UNIT

Tavola N°6 - Rev. 1 | **VS710790021**

VSC1150.30	VSC1150.30I	VSC1150.30PLUS	VSC1150.30PLUSI	VSC1150.30DOUBLE	VSC1150.30DOUBLEI
●	●	●	●	●	●

N°	Cod.	Descrizione	Description	Beschreibung	Description	Descripción
1	VSB0472000	Rosetta 12,3x22x2	Washer	Rosette	Rondelle	Roseta
2	VSB1778000	Molla T 2x12x54	2x12x54 T spring	Feder T 2x12x54	Ressort T 2x12x54	Resorte T 2x12x54
3	VS201042	VTE M8x40	TE M8x40 screw	Schraube TE M8x40	Vis TE M8x40	Tornillo TE M8x40
4	VS201106	VTE M10x35	TE M10x35 screw	Schraube TE M10x35	Vis TE M10x35	Tornillo TE M10x35
5	VS201236	VTE M12x50	TE M12x50 screw	Schraube TE M12x50	Vis TE M12x50	Tornillo TE M12x50
6	VS710613270	Perno braccio	Arm pin	Armstift	Pivot bras	Perno brazo
7	VS203108	VTE M10x55	TE M10x55 screw	Schraube TE M10x55	Vis TE M10x55	Tornillo TE M10x55
8	VS206021	VTCEI M6x20	TCEI M6x20 screw	Schraube TCEI M6x20	Vis TCEI M6x20	Tornillo TCEI M6x20
9	VS206127	VTCEI M6x25	TCEI M6x25 screw	Schraube TCEI M6x25	Vis TCEI M6x25	Tornillo TCEI M6x25
10	VS206172	VTCEI M8x16	TCEI M8x16 screw	Schraube TCEI M8x16	Vis TCEI M8x16	Tornillo TCEI M8x16
11	VS206503	VTCEI M6x35	TCEI M6x35 screw	Schraube TCEI M6x35	Vis TCEI M6x35	Tornillo TCEI M6x35
12	VS210059	VSTEI M10x30	STEI M10x30 screw	Schraube STEI M10x30	Vis STEI M10x30	Tornillo STEI M10x30
13	VS222011	Dado alto M10	M10 high nut	Obere Mutter M10	Écrou haut M10	Tuerca alta M10
14	VS224007	Dado medio M6	M6 middle nut	Mittlere Mutter M6	Écrou moyen M6	Tuerca media M6
15	VS224015	Dado es.medio M12	M12 middle hexagonal nut	Mittlere sechswinkling Mutter M12	Écrou hexagonal moyen M12	Tuerca hexagonal medio M12
16	VS226011	Dado es.basso M10	M10 low hexagonal nut	Untere sechswinkling Mutter M10	Écrou hexagonal bas M10	Tuerca hexagonal bajo M10
17	VS226015	Dado esagonale basso M12	M12 low hexagonal nut	Untere sechswinkling Mutter M12	Écrou hexagonal bas M12	Tuerca hexagonal bajo M12
18	VS228011	Dado autobloccante M8	M8 self-locking nut	Mutter selbstsperrend M8	Écrou auto-bloquant M8	Tuerca autoblocante M8
19	VS228013	Dado autobloccante M16	M16 self-locking nut	Mutter selbstsperrend M16	Écrou auto-bloquant M16	Tuerca autoblocante M16
20	VS228304	Dado triblock M12	M12 triblock nut	Triblockmutter M12	Écrou triblock M12	Tuerca triblock M12
21	VSB1812000	Dado M10	M10 nut	Mutter M10	Écrou M10	Tuerca M10
22	VS236020	Rondella piana 17	17 flat washer	Ebene Scheibe 17	Rondelle plane 17	Arandela plana 17
23	VS237025	Rondella piana 12x25x2,5	12x25x2,5 flat washer	Ebene Scheibe 12x25x2,5	Rondelle plane 12x25x2,5	Arandela plana 12x25x2,5
24	VS237072	Rosetta D.8,4x22x2,5	D.8,4x22x2,5 washer	Rosette D.8,4x22x2,5	Rondelle D.8,4x22x2,5	Roseta D.8,4x22x2,5
25	VS243007	Seeger est. 15	External seeger 15	Seeger aussen 15	Anneau de retenue extérieur 15	Seeger esterno 15
26	VSB3159000	Molla per pedaliera	Spring for pedalboard	Feder für Pedalleiste	Ressort pour pédales de direction	Resorte para pedalera
27	VS710510091	Strangolo camma	Neck cam	Sperrvorrichtungscamme	Came étranglement	Estrangulación leva
28	VS710590790F	Pistone strangolo	Neck piston	Sperrvorrichtungskolben	Piston étranglement	Pistón estrangulación
29	VS710590970	Cilindro strangolo	Neck cylinder	Sperrvorrichtungszylinder	Cylindre étranglement	Cilindro estrangulación
30	VS710610731	Supporto braccio stallonatore	Bead breaker arm support	Abdrückerarmhalterung	Support bras décolle-talons	Soporte brazo destalonador
31	VS710611970	Cricchetto	Jack	Sperrkegel	Cliquet	Tinquete
32	VS710611980	Strangolo paracadute	Parachute neck	Sperrvorrichtung an Fallschirm	Étranglement à parachute	Estrangulación a paracaída
33	VS710612000	Leva cricchetto stallonatore	Bead breaker unlock lever	Hebel der Abdrückerslösung	Levier déblocage décolle-talon	Leva desbloqueo destalonador
34	VS710612060	Strangolo	Neck	Sperrvorrichtung	Étranglement	Estrangulación
35	VS710612070	Distanziale per molla	Spacer for spring	Abstandsstück für Feder	Entretoise pour ressort	Distanciador para resorte
36	VS710612080	Distanziale strangolo	Neck spacer	Sperrvorrichtungsabstandsstück	Entretoise étranglement	Distanciador estrangulación
37	VS710612140	Perno cricchetto	Jack pin	Zapfen Sperrkegel	Pivot cliquet	Perno trinquete
38	VS710612300	Perno per cilindro	Pin for cylinder	Zapfen für Zylinder	Pivot pour cylindre	Perno para cilindro
39	VS710710340	Insieme supporto braccio	Arm support assembly	Armträgersatz	Assemblage support bras	Conjunto soporte brazo
40	VS710710530	Pattino frontale	Front sliding block	Stirnschlitten	Patin frontal	Patín frontal
41	VS710711770	Pattino supporto braccio	Arm support sliding block	Armträgerschlitten	Patin support bras	Patín soporte brazo
42	VS752223950	VTE M12x40	TE M12X40 screw	Schraube TE M12X40	Vis TE M12X40	Tornillo TE M12X40

PANZITTA SALES & SERVICE
72 George Avenue
Wilkes-Barre, PA 18705
570-822-6720 800-822-6720
www.panzittasales.com

LISTA DEI COMPONENTI - LIST OF COMPONENTS - TEILELISTE
LISTE DES PIECES DETACHEES - LISTA DE PIEZAS

ARM SUPPORT UNIT

Tavola N°6 - Rev. 1 | **VS710790021**

VSC1150.30	VSC1150.30I	VSC1150.30PLUS	VSC1150.30PLUSI	VSC1150.30DOUBLE	VSC1150.30DOUBLEI
●	●	●	●	●	●

N°	Cod.	Descrizione	Description	Beschreibung	Description	Descripción
43	VS903120	*Manopola a pressione d.8*	*d.8 pressure knob*	*Pressionknopf d.8*	*Poignée à pression d.8*	*Pomo a presión d.8*
44	VS918014	*Molla CMP*	*CMP spring*	*Feder CMP*	*Ressort CMP*	*Resorte CMP*
45	VS710690520	*Cilindro strangolo*	*Neck cylinder*	*Sperrvorrichtungszylinder*	*Cylindre étranglement*	*Cilindro estrangulación*
46	VS710611990	*Distanziale*	*Spacer*	*Abstandsstück*	*Entretoise*	*Distanciador*
47	VS201062	*VTE M10x40*	*TE M10x40 screw*	*Schraube TE M10x40*	*Vis TE M10x40*	*Tornillo TE M10x40*

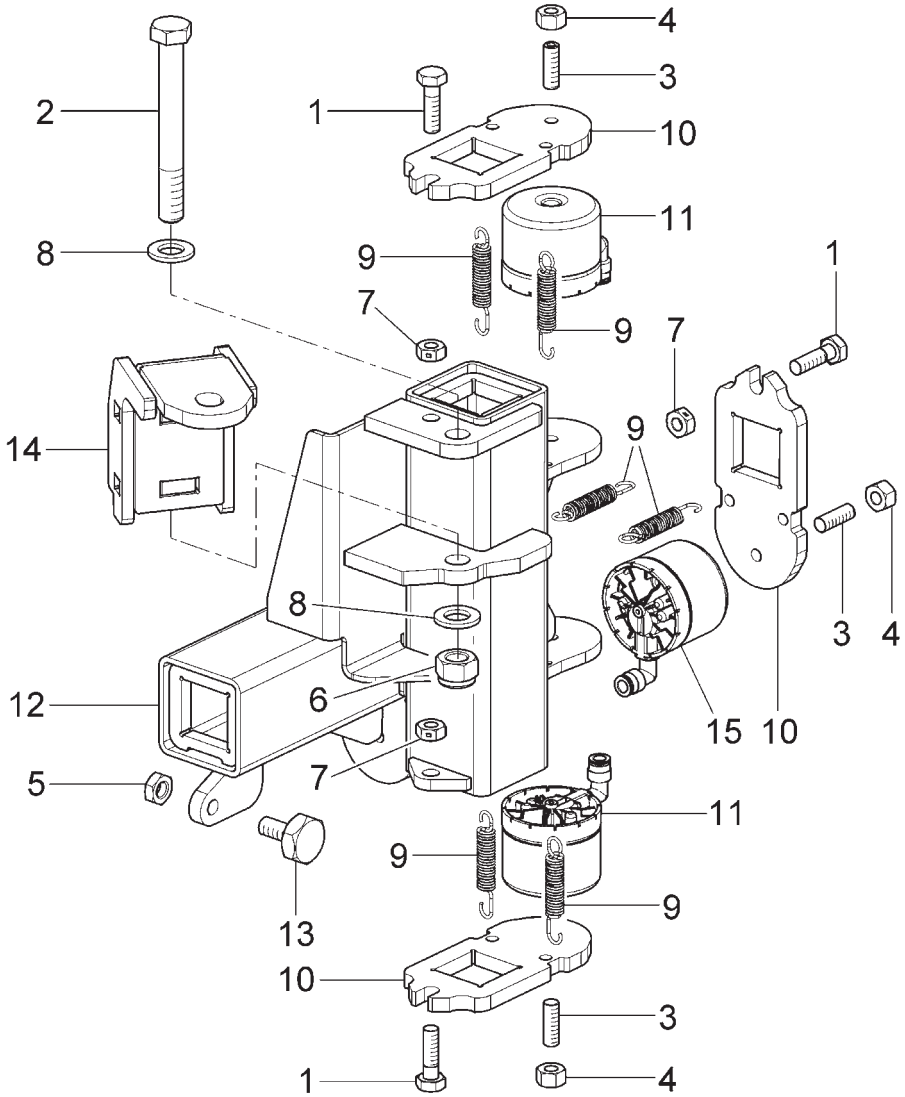

VSC1150.30	VSC1150.30I	VSC1150.30PLUS	VSC1150.30PLUSI	VSC1150.30DOUBLE	VSC1150.30DOUBLEI
•	•	•	•	•	•

PANZITTA SALES & SERVICE
72 George Avenue
Wilkes-Barre, PA 18705
570-822-6720 800-822-6720
www.panzittasales.com

LISTA DEI COMPONENTI - LIST OF COMPONENTS - TEILELISTE
LISTE DES PIECES DETACHEES - LISTA DE PIEZAS

Tavola N°7 - Rev. 0 | **VS710790030**

DOUBLE GUIDE UNIT

7107-R003-2_V

PANZITTA SALES & SERVICE
72 George Avenue
Wilkes-Barre, PA 18705
570-822-6720 800-822-6720
www.panzittasales.com

LISTA DEI COMPONENTI - LIST OF COMPONENTS - TEILELISTE
LISTE DES PIECES DETACHEES - LISTA DE PIEZAS

DOUBLE GUIDE UNIT

Tavola N°7 - Rev. 0 | **VS710790030**

VSC1150.30	VSC1150.30I	VSC1150.30PLUS	VSC1150.30PLUSI	VSC1150.30DOUBLE	VSC1150.30DOUBLEI
●	●	●	●	●	●

N°	Cod.	Descrizione	Description	Beschreibung	Description	Descripción
1	VS201062	VTE M10x40	TE M10x40 screw	Schraube TE M10x40	Vis TE M10x40	Tornillo TE M10x40
2	VS201379	VTE M16x130	TE M16x130 screw	Schraube TE M16x130	Vis TE M16x130	Tornillo TE M16x130
3	VS210059	VSTEI M10x30	STEI M10x30 screw	Schraube STEI M10x30	Vis STEI M10x30	Tornillo STEI M10x30
4	VS222011	Dado alto M10	M10 high nut	Obere Mutter M10	Écrou haut M10	Tuerca alta M10
5	VS226015	Dado esagonale basso M12	M12 low hexagonal nut	Untere sechswinkling Mutter M12	Écrou hexagonal bas M12	Tuerca hexagonal bajo M12
6	VS228013	Dado autobloccante M16	M16 self-locking nut	Mutter selbstsperrend M16	Écrou auto-bloquant M16	Tuerca autoblocante M16
7	VSB1812000	Dado M10	M10 nut	Mutter M10	Écrou M10	Tuerca M10
8	VS236020	Rondella piana 17	17 flat washer	Ebene Scheibe 17	Rondelle plane 17	Arandela plana 17
9	VSB3159000	Molla per pedaliera	Spring for pedalboard	Feder für Pedalleiste	Ressort pour pédales de direction	Resorte para pedalera
10	VS710510090	Strangolo camma	Neck cam	Sperrvorrichtungscamme	Came étranglement	Estrangulación leva
11	VS710590970	Cilindro strangolo	Neck cylinder	Sperrvorrichtungszylinder	Cylindre étranglement	Cilindro estrangulación
12	VS710710280	Insieme doppia guida	Double guide assembly	Doppelführungsatz	Assemblage double guide	Conjunto doble guía
13	VS710711770	Pattino supporto braccio	Arm support sliding block	Armträgerschlitten	Patin support bras	Patín soporte brazo
14	VS710711820	Insieme attacco cilindro	Cylinder coupling assembly	Zylinderanschlusssatz	Assemblage branchement cylindre	Ensamblado ataque cilindro
15	VS710690520	Cilindro strangolo	Neck cylinder	Sperrvorrichtungszylinder	Cylindre étranglement	Cilindro estrangulación

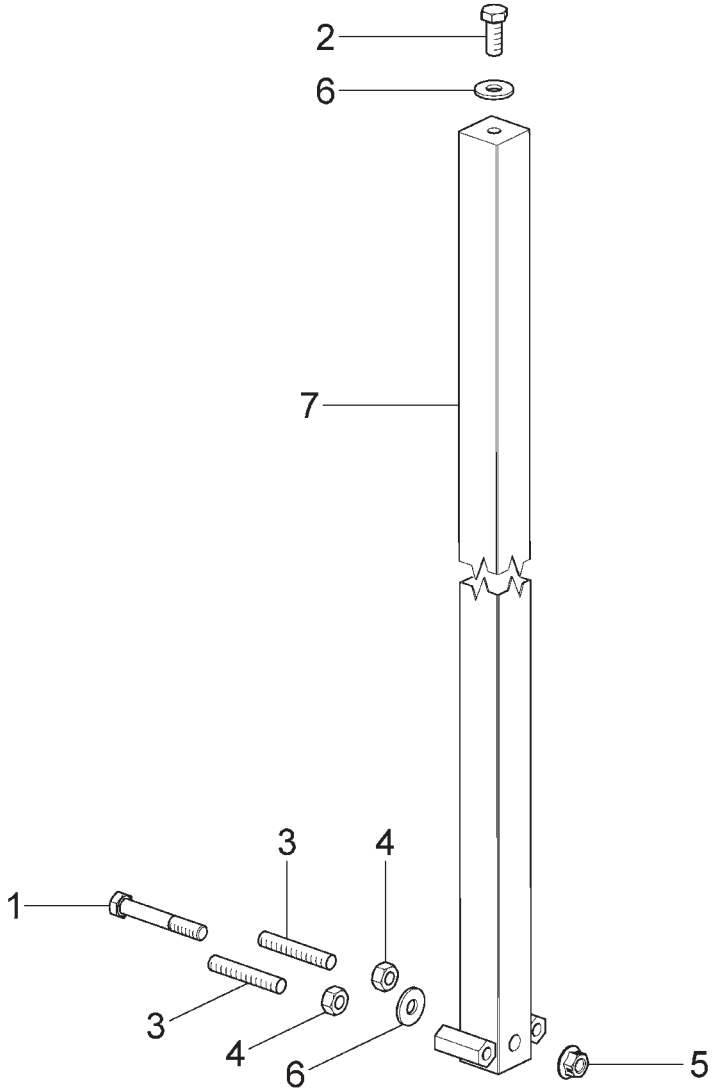

VSC1150.30	VSC1150.30I	VSC1150.30PLUS	VSC1150.30PLUSI	VSC1150.30DOUBLE	VSC1150.30DOUBLEI
•	•	•	•	•	•

PANZITTA SALES & SERVICE
72 George Avenue
Wilkes-Barre, PA 18705
570-822-6720 800-822-6720
www.panzittasales.com

LISTA DEI COMPONENTI - LIST OF COMPONENTS - TEILELISTE
LISTE DES PIECES DETACHEES - LISTA DE PIEZAS

Tavola N°8 - Rev. 0 | **VS710790180**

PANEL UNIT WITH HEXAGONS

7107-R003-2_V

PANZITTA SALES & SERVICE
72 George Avenue
Wilkes-Barre, PA 18705
570-822-6720 800-822-6720
www.panzittasales.com

LISTA DEI COMPONENTI - LIST OF COMPONENTS - TEILELISTE
LISTE DES PIECES DETACHEES - LISTA DE PIEZAS

PANEL UNIT WITH HEXAGONS

Tavola N°8 - Rev. 0 | **VS710790180**

VSC1150.30	VSC1150.30I	VSC1150.30PLUS	VSC1150.30PLUSI	VSC1150.30DOUBLE	VSC1150.30DOUBLEI
●	●	●	●	●	●

N°	Cod.	Descrizione	Description	Beschreibung	Description	Descripción
1	VS201301	*VTE M12x80*	*TE M12x80 screw*	*Schraube TE M12x80*	*Vis TE M12x80*	*Tornillo TE M12x80*
2	VS203072	*VTE M12x30*	*TE M12x30 screw*	*Schraube TE M12x30*	*Vis TE M12x30*	*Tornillo TE M12x30*
3	VS210506	*VSTEI M12x70*	*STEI M12x70 screw*	*Schraube STEI M12x70*	*Vis STEI M12x70*	*Tornillo STEI M12x70*
4	VS224015	*Dado es.medio M12*	*M12 middle hexagonal nut*	*Mittlere sechswinkling Mutter M12*	*Écrou hexagonal moyen M12*	*Tuerca hexagonal medio M12*
5	VS228503	*Dado autofrenante M12*	*M12 braking nut*	*Selbsbremsen Mutter M12*	*Écrou auto-freinant M12*	*Tuerca autofrenante M12*
6	VS237069	*Rondella piana*	*Flat washer*	*Ebene Scheibe*	*Rondelle plane*	*Arandela plana*
7	VS710711880	*Insieme quadro*	*Square assembly*	*Tafelsatz*	*Assemblage tableau*	*Conjunto cuadro*

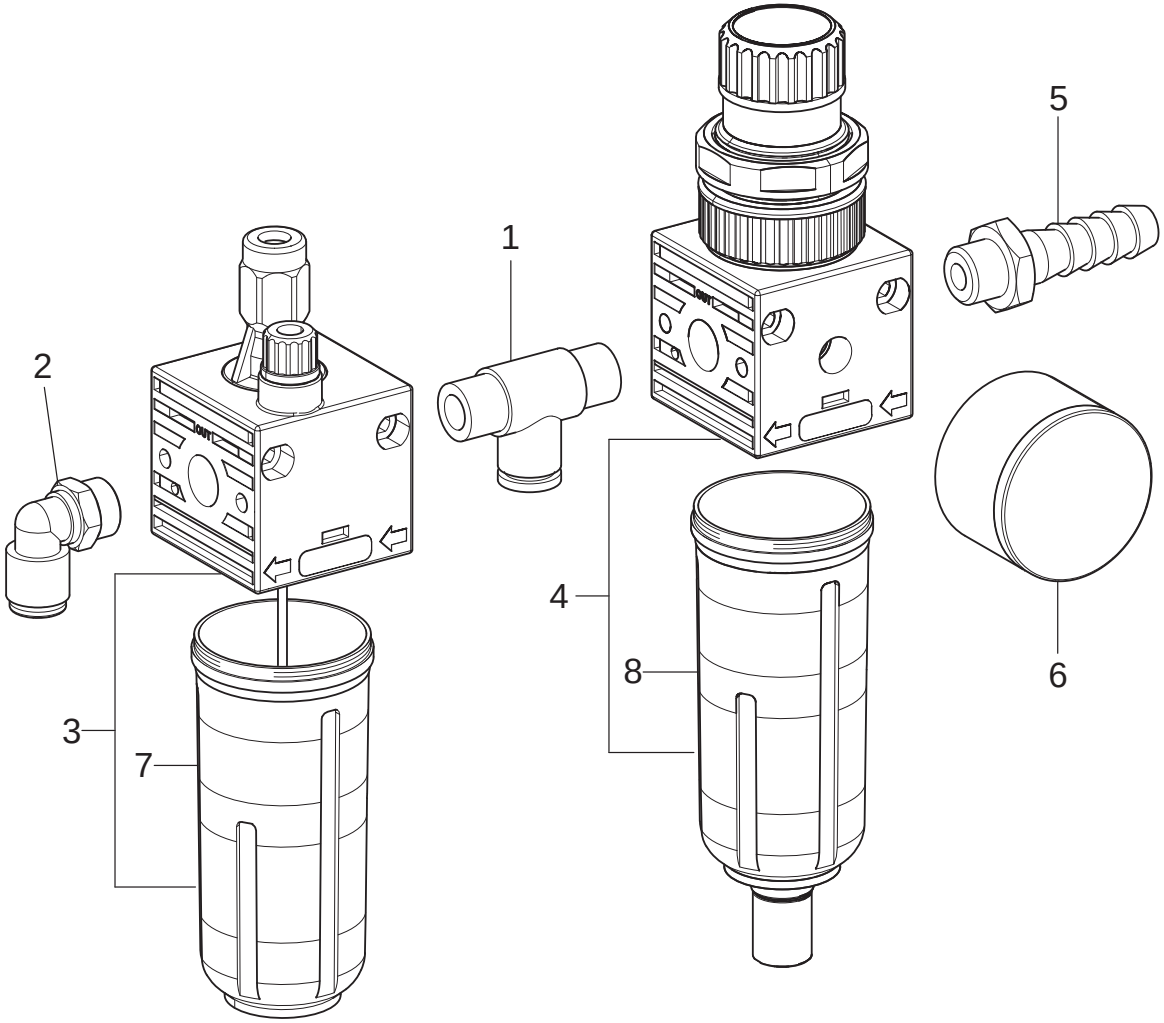

VSC1150.30	VSC1150.30I	VSC1150.30PLUS	VSC1150.30PLUSI	VSC1150.30DOUBLE	VSC1150.30DOUBLEI
•	•	•	•	•	•

PANZITTA SALES & SERVICE
72 George Avenue
Wilkes-Barre, PA 18705
570-822-6720 800-822-6720
www.panzittasales.com

LISTA DEI COMPONENTI - LIST OF COMPONENTS - TEILELISTE
LISTE DES PIECES DETACHEES - LISTA DE PIEZAS

Tavola N°9 - Rev. 0 | **VS710690480**

AIR TREATMENT UNIT

7107-R003-2_V

PANZITTA SALES & SERVICE
72 George Avenue
Wilkes-Barre, PA 18705
570-822-6720 800-822-6720
www.panzittasales.com

LISTA DEI COMPONENTI - LIST OF COMPONENTS - TEILELISTE
LISTE DES PIECES DETACHEES - LISTA DE PIEZAS

AIR TREATMENT UNIT

Tavola N°9 - Rev. 0 | **VS710690480**

VSC1150.30	VSC1150.30I	VSC1150.30PLUS	VSC1150.30PLUSI	VSC1150.30DOUBLE	VSC1150.30DOUBLEI
●	●	●	●	●	●

N°	Cod.	Descrizione	Description	Beschreibung	Description	Descripción
1	VS325148	*Raccordo intermedio T*	*T middle union*	*Rechtsverbindung T*	*Raccord intérmediaire T*	*Conector intermedio T*
2	VS325118	*Raccordo girevole*	*Swivel coupling*	*Drehbarer Anschluss*	*Raccord pivotant*	*Enlace girable*
3	VS399267	*Lubrificatore*	*Lubricator*	*Schmierer*	*Graisseur*	*Lubrificator*
4	VS399268	*Filtro*	*Filter*	*Filter*	*Filtre*	*Filtro*
5	VSB2657000	*Portagomma 12 - 1/4*	*12-1/4 rubber holde*	*Schlauchhalter Zapfen 12-1/4*	*Porte-tuyau 12-1/4*	*Porta goma 12-1/4*
6	VS909026	*Manometro D. 40*	*D. 40 pressure gauge*	*Manometer D. 40*	*Manomètre D. 40*	*Manómetro D. 40*
7	VS710670040	*Tazza per lubrificatore*	*Lubricator cup*	*Schmiermittelbecher*	*Godet graisseur*	*Taza lubrificador*
8	VS710670030	*Tazza per filtro*	*Filter cup*	*Filterbecher*	*Godet filtre*	*Taza filtro*

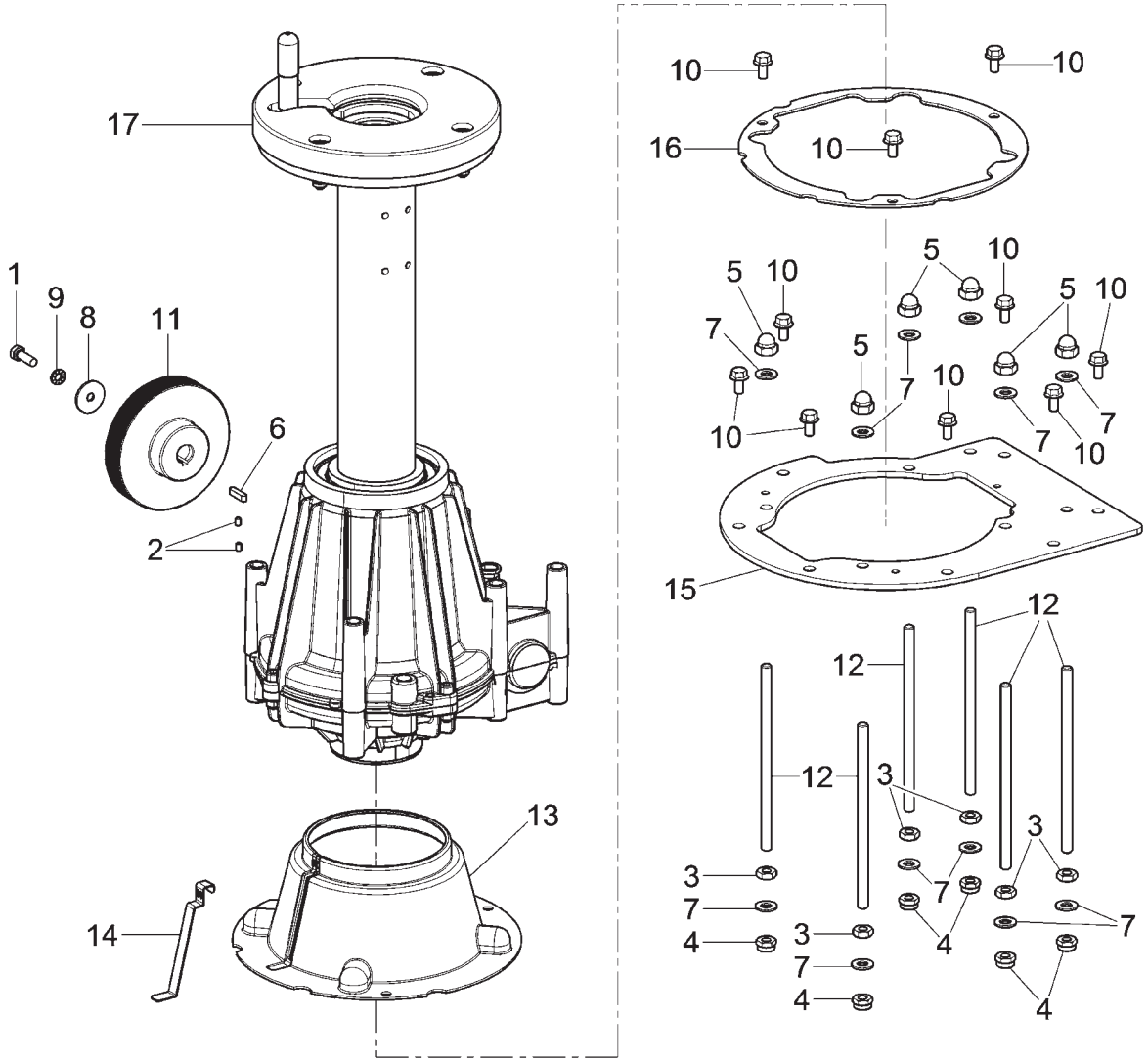

VSC1150.30	VSC1150.30I	VSC1150.30PLUS	VSC1150.30PLUSI	VSC1150.30DOUBLE	VSC1150.30DOUBLEI
•	•	•	•	•	•

PANZITTA SALES & SERVICE
72 George Avenue
Wilkes-Barre, PA 18705
570-822-6720 800-822-6720
www.panzittasales.com

LISTA DEI COMPONENTI - LIST OF COMPONENTS - TEILELISTE
LISTE DES PIECES DETACHEES - LISTA DE PIEZAS

Tavola N°10 - Rev. 0 | **VS710591341**

SELFCENTERING CHUCK UNIT

PANZITTA SALES & SERVICE
72 George Avenue
Wilkes-Barre, PA 18705
570-822-6720 800-822-6720
www.panzittasales.com

LISTA DEI COMPONENTI - LIST OF COMPONENTS - TEILELISTE
LISTE DES PIECES DETACHEES - LISTA DE PIEZAS

SELFCENTERING CHUCK UNIT

Tavola N°10 - Rev. 0 | **VS710591341**

VSC1150.30	VSC1150.30I	VSC1150.30PLUS	VSC1150.30PLUSI	VSC1150.30DOUBLE	VSC1150.30DOUBLEI
●	●	●	●	●	●

N°	Cod.	Descrizione	Description	Beschreibung	Description	Descripción
1	VS203038	VTE M8x25	TE M8x25 screw	Schraube TE M8x25	Vis TE M8x25	Tornillo TE M8x25
2	VS213003	VSTEI M5x8	STEI M5x8 screw	Schraube STEI M5x8	Vis STEI M5x8	Tornillo STEI M5x8
3	VS226011	Dado es.basso M10	M10 low hexagonal nut	Untere sechswinkling Mutter M10	Écrou hexagonal bas M10	Tuerca hexagonal bajo M10
4	VS228022	Dado autobloccante basso M10	M10 low self-locking nut	Untere Selbstmutter M10	Écrou auto-bloquant bas M10	Tuerca autoblocante bajo M10
5	VS229008	Dado cieco M10	M10 blind nut	Blindmutter M10	Écrou borgne M10	Tuerca ciega M10
6	VS231003	Chiavetta 6x6x25	6x6x25 wrench	Schlüssel 6x6x25	Clé 6x6x25	Llave 6x6x25
7	VS236007	Rondella piana 10,5x21x2	Fe 10,5x21x2 washer	Ebene Scheibe 10,5x21x2	Rondelle Fe 10,5x21x2	Roseta Fe 10,5x21x2
8	VS237037	Rondella piana tranc. 8x32x2,5	8x32x2,5 flat washer	Unterlagescheibe 8x32x2,5	Rondelle plane 8x32x2,5	Arandela plana 8x32x2,5
9	VS239023	Rondella dentata 8,4	8,4 toothed washer	Zahnrosette 8,4	Rondelle dentée 8,4	Roseta dentada 8,4
10	VS272172	VTE M8x16	TE M8x16 screw	Schraube TE M8x16	Vis TE M8x16	Tornillo TE M8x16
11	VS710012461	Puleggia	Pulley	Riemenscheibe	Poulie	Polea
12	VS710514840	Barra filettata M10x195	Threaded bar M10x195	Gewindestange M10x195	Barre filetée M10x195	Barra fileteada M10x195
13	VS710413770	Copertura riduttore	Reduction gear cover	Untersetzerabdeckung	Couverture reducteur	Cobertura reductor
14	VS710413780	Chiusura copertura	Cover closing	Abdeckungverschluss	Fermeture couverture	Cierre cobertura
15	VS710515670	Piastra adattamento	Adapting plate	Platte Einpassen	Plaque adaptation	Placa adaptación
16	VS710515680	Fissaggio copertura	Cover fixing	Abdeckungsbefestigung	Fixage couverture	Fijado cobertura
17	VS710591391	Riduttore VSF	Reduction gear VSF	Untersetzer VSF	Reducteur VSF	Reductor VSF

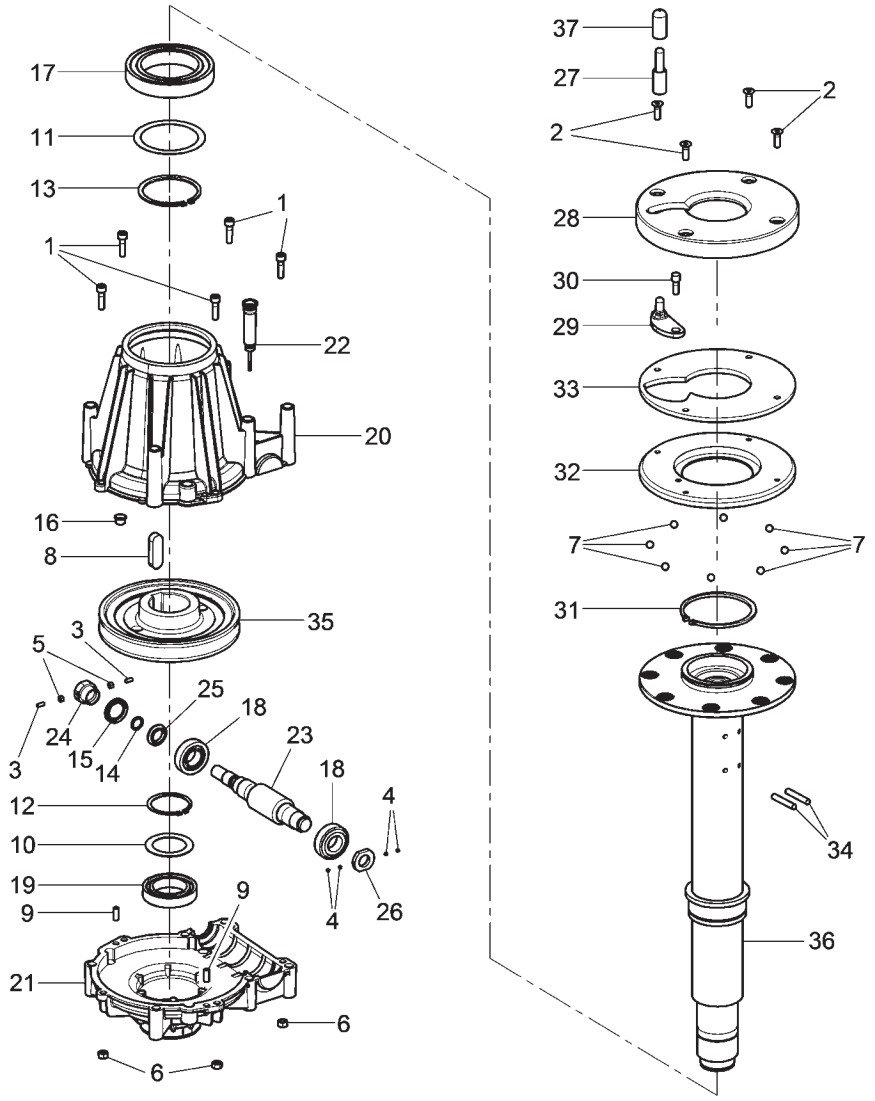

VSC1150.30	VSC1150.30I	VSC1150.30PLUS	VSC1150.30PLUSI	VSC1150.30DOUBLE	VSC1150.30DOUBLEI
•	•	•	•	•	•

PANZITTA SALES & SERVICE
72 George Avenue
Wilkes-Barre, PA 18705
570-822-6720 800-822-6720
www.panzittasales.com

LISTA DEI COMPONENTI - LIST OF COMPONENTS - TEILELISTE
LISTE DES PIECES DETACHEES - LISTA DE PIEZAS

Tavola N°11 - Rev. 0 | **VS710591391**

REDUCTION GEAR VSF

PANZITTA SALES & SERVICE
72 George Avenue
Wilkes-Barre, PA 18705
570-822-6720 800-822-6720
www.panzittasales.com

LISTA DEI COMPONENTI - LIST OF COMPONENTS - TEILELISTE
LISTE DES PIECES DETACHEES - LISTA DE PIEZAS

REDUCTION GEAR VSF

Tavola N°11 - Rev. 0 | **VS710591391**

VSC1150.30	VSC1150.30I	VSC1150.30PLUS	VSC1150.30PLUSI	VSC1150.30DOUBLE	VSC1150.30DOUBLEI
●	●	●	●	●	●

N°	Cod.	Descrizione	Description	Beschreibung	Description	Descripción
1	VS206040	VTCEI M8x30	TCEI M8x30 screw	Schraube TCEI M8x30	Vis TCEI M8x30	Tornillo TCEI M8x30
2	VS209038	VTPSEI M8x25	TSPEI M8x25 screw	Schraube TSPEI M8x25	Vis TSPEI M8x25	Tornillo TSPEI M8x25
3	VS212005	VSTEI M5x12	STEI M5x12 screw	Schraube STEI M5x12	Vis STEI M5x12	Tornillo STEI M5x12
4	VS212490	VSTEI M4x4	STEI M4x4 screw	Schraube STEI M4x4	Vis STEI M4x4	Tornillo STEI M4x4
5	VS226005	Dado esagonale basso M5	M5 low hexagonal nut	Untere sechswinkling Mutter M5	Écrou hexagonal bas M5	Tuerca hexagonal baja M5
6	VS224009	Dado esagonale medio M8	M8 middle hexagonal nut	Mittlere sechswinkling Mutter M8	Écrou hexagonal moyen M8	Tuerca hexagonal medio M8
7	VSB3391000	Sfera acciaio Ø 10	Ø 10 steel ball	Stahlkugel Ø 10	Sphére acier Ø 10	Esfera acero Ø 10
8	VS231086	Chiavetta 18x11x55	18x11x55 wrench	Schlüssel 18x11x55	Clé 18x11x55	Llave 18x11x55
9	VS234169	Spina cilindrica 8x20	8x20 cylindrical pin	Zylinderstecker 8x20	Goupille cylindrique 8x20	Enchufe cilíndrico 8x20
10	VS237413	Rondella di spessore	Thickness washer	Beilagscheibe	Rondelle d'épaisseur	Arandela de espesor
11	VS237528	Rondella di spessore	Thickness washer	Beilagscheibe	Rondelle d'épaisseur	Arandela de espesor
12	VS243023	Seeger esterno 60	External seeger 60	Seeger aussen 60	Anneau de retenue extérieur 60	Seeger esterno 60
13	VS243088	Seeger per esterni	External seeger	Seeger aussen	Anneau de retenue extérieur	Seeger esterno
14	VS401007	OR	OR	OR	OR	OR
15	VS404007	Guarnizione	Gasket	Dichtung	Joint	Junta
16	VS413089	Tappo	Cap	Stöpsel	Bouchon	Tapa
17	VS605052	Cuscinetto radiale	Radial bearing	Rundlager	Roulement radial	Rodamiento radiale
18	VS607007	Cuscinetto	Bearing	Lager	Roulement	Rodamiento
19	VSB8574000	Cuscinetto	Bearing	Lager	Roulement	Rodamiento
20	VS710514710	Semicorpo superiore	Upper half-body	Oberhalb-Gehäuse	Demi-corps supérieur	Semicuerpo superior
21	VS140305541	Semicorpo inferiore	Lower half-body	Unterhalb-Gehäuse	Demi-corps inférieur	Semicuerpo inferior
22	VS140305610	Asta livello olio	Oil level rod	Ölstandstange	Tige niveau huile	Asta nivel de aceite
23	VS140315991	Vite senza fine	Worm screw	Endlosschraube	Vis sans fin	Tornillo sin fin
24	VS140316001	Ghiera	Ring nut	Nutmutter	Collier	Virola
25	VS140316010	Distanziale	Spacer	Abstandsstück	Entretoise	Distanciador
26	VS140316021	Ghiera	Ring nut	Nutmutter	Collier	Virola
27	VS710012941	Prolunga perno	Pin extension	Stiftverlängerung	Rallonge pivot	Alargador perno
28	VS710012960	Appoggio ruota gommato	Rubber wheel bearing	Gummierten Auflage Reifen	Appui roue caoutchouté	Apoyo rueda en goma
29	VS710013680	Biella con trascinatore	Connecting rod with entrainer	Pleuelstange mit Führungspin	Bielle avec galet	Biela con transportador
30	VS710012780	Perno filettato	Threaded pin	Gewindezapfen	Pivot fileté	Perno fileteado
31	VS243055	Seeger esterno 105	External seeger 105	Seeger aussen 105	Anneau de retenue extérieur 105	Seeger esterno 105
32	VS710010700	Flangia superiore	Upper flange	Obereflansch	Bride supérieur	Brida superior
33	VS710012770	Distanziale per appoggio	Spacer for bearing	Abstandsstück für Auflage	Entreoise pour appui	Distanciador para apoyo
34	VS234192	Spina cilindrica 8x50	8x50 cylindrical pin	Zylinderstecker 8x50	Goupille cylindrique 8x50	Enchufe cilíndrico 8x50
35	VS710515000	Corona	Crown wheel	Kranz	Couronne	Corona
36	VS710514921	Albero riduttore	Reduction gear shaft	Untersetzungsgetriebewelle	Arbre réducteur	Arbol reductor
37	VS710090481	Protezione con or	Guard with OR	Schutz mit OR	Protection avec OR	Protección con OR

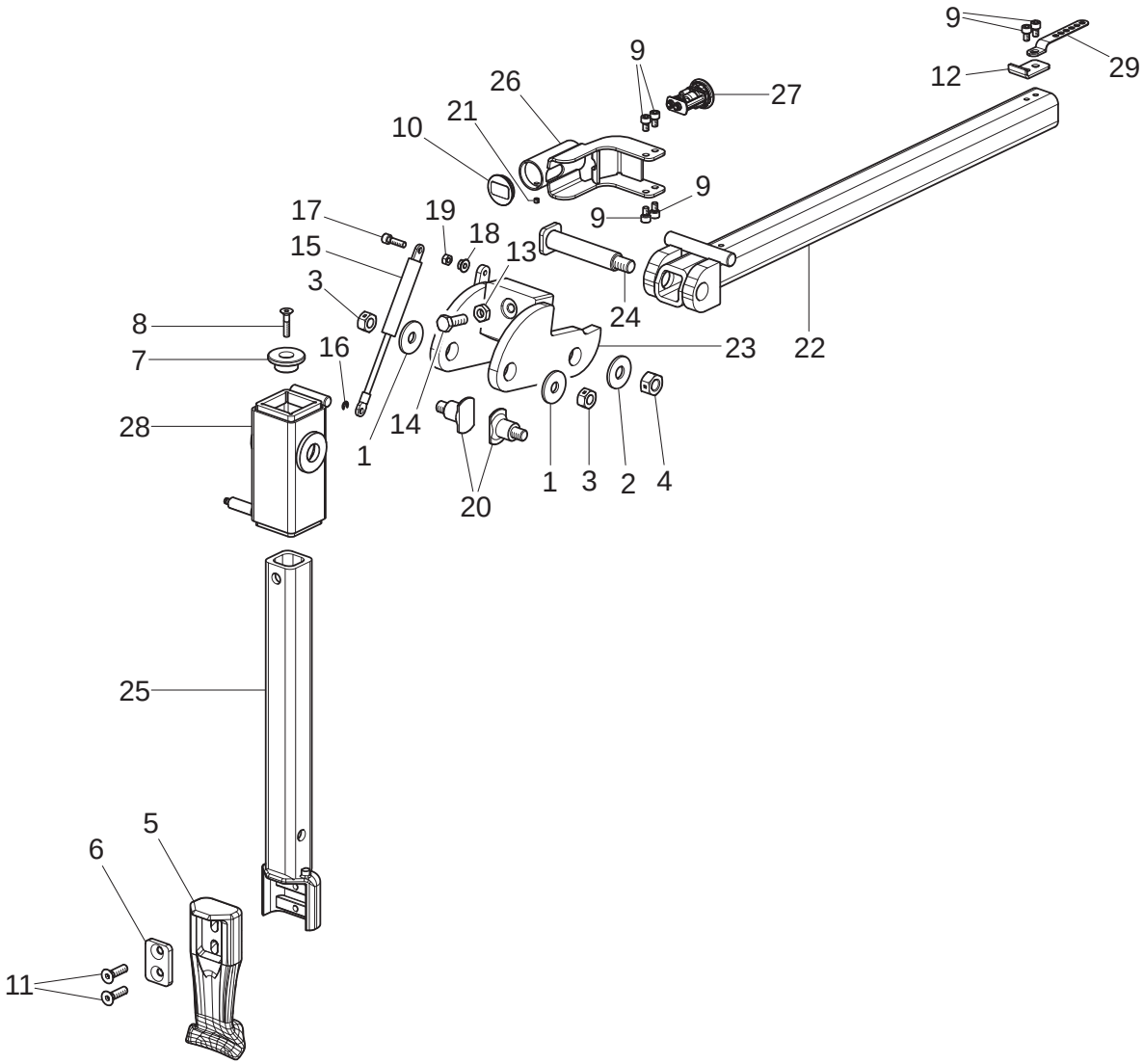

VSC1150.30	VSC1150.30I	VSC1150.30PLUS	VSC1150.30PLUSI	VSC1150.30DOUBLE	VSC1150.30DOUBLEI
•	•	•	•	•	•

PANZITTA SALES & SERVICE
72 George Avenue
Wilkes-Barre, PA 18705
570-822-6720 800-822-6720
www.panzittasales.com

LISTA DEI COMPONENTI - LIST OF COMPONENTS - TEILELISTE
LISTE DES PIECES DETACHEES - LISTA DE PIEZAS

Tavola N°12 - Rev. 1 | **VS710790101**

TOOL ARM UNIT

7107-R003-2_V

PANZITTA SALES & SERVICE
72 George Avenue
Wilkes-Barre, PA 18705
570-822-6720 800-822-6720
www.panzittasales.com

LISTA DEI COMPONENTI - LIST OF COMPONENTS - TEILELISTE
LISTE DES PIECES DETACHEES - LISTA DE PIEZAS

TOOL ARM UNIT

Tavola N°12 - Rev. 1 | **VS710790101**

VSC1150.30	VSC1150.30I	VSC1150.30PLUS	VSC1150.30PLUSI	VSC1150.30DOUBLE	VSC1150.30DOUBLEI
●	●	●	●	●	●

N°	Cod.	Descrizione	Description	Beschreibung	Description	Descripción
1	VS237038	Rondella tranciante	Shear washer	Schneiderscheibe	Rondelle tronçonneuse	Arandela cizalla
2	VS237074	Rosetta Fe 14x36x3	Fe 14x36x3 washer	Rosette Fe 14x36x3	Rondelle Fe 14x36x3	Roseta Fe 14x36x3
3	VS228304	Dado triblock M12	M12 triblock nut	Triblockmutter M12	Écrou triblock M12	Tuerca triblock M12
4	VS228305	Dado biblock M14	M14 biblock nut	Biblock Mutter M14	Écrou biblock M14	Tuerca biblock M14
5	VS710711340	Utensile di montaggio	Assembling tool	Montagewerkzeug	Outil de montage	Utensillo de montaje
6	VS710711420	Piastrina utensile	Tool plate	Werkzeugsplatte	Plaquette outil	Placa utensilio
7	VS710711660	Tappo per tubo	Plug for pipe	Stöpsel für Schlauch	Bouchon pour tuyau	Tapa para tubo
8	VS209128	VTPSEI M6x30	TSPEI M6x30 screw	Schraube TSPEI M6x30	Vis TSPEI M6x30	Tornillo TSPEI M6x30
9	VS206012	VTCEI M6x10	TCEI M6x10 screw	Schraube TCEI M6x10	Vis TCEI M6x10	Tornillo TCEI M6x10
10	VSB1695000	Tappo Ø 30	Ø 30 cap	Stöpsel Ø 30	Bouchon Ø 30	Tapa Ø 30
11	VS209040	VTPSEI M8x30	TSPEI M8x30 screw	Schraube TSPEI M8x30	Vis TSPEI M8x30	Tornillo TSPEI M8x30
12	VS710513650	Fermo fune	Cable stopper	Seilshalterung	Arrêt câble	Traba cable
13	VS226011	Dado es.basso M10	M10 low hexagonal nut	Untere sechswinkling Mutter M10	Écrou hexagonal bas M10	Tuerca hexagonal bajo M10
14	VS256193	VTE M10x30	TE M10x30 screw	Schraube TE M10x30	Vis TE M10x30	Tornillo TE M10x30
15	VS321060	Molla a gas	Gas spring	Gasfeder	Ressort à gaz	Resorte a gas
16	VS299042	Anello di fermo D.4	D.4 stopper ring	Halterung Ring D.4	Anneau d'arrêt D.4	Anillo de traba D.4
17	VS206408	VTCEI M6x22	TCEI M6x22 screw	Schraube TCEI M6x22	Vis TCEI M6x22	Tornillo TCEI M6x22
18	VS228500	Dado flangiato M8	M8 flange nut	Flanschmutter M8	Écrou flangé M8	Tuerca rebordeado M8
19	VS224007	Dado medio M6	M6 middle nut	Mittlere Mutter M6	Écrou moyen M6	Tuerca media M6
20	VS710712200	Perno per guida	Pin for guide	Zapfen für Führung	Pivot pour guide	Perno para guía
21	VS213165	VSTEI M4x6	STEI M4x6 screw	Schraube STEI M4x6	Vis STEI M4x6	Tornillo STEI M4x6
22	VS710711550	Insieme braccio orizzontale	Horizontal arm assembly	Horizontalarmsatz	Ensamblage bras horizontal	Ensamblado brazo horizontal
23	VS710712180	Insieme bloccaggio bielle	Connecting rods locking assembly	Pleuelstangesperrsatz	Ensamblage blocage bielles	Ensamblado bloqueo bielas
24	VS710711610	Insieme perno bielle	Connecting rods pin assembly	Pleuelstangestiftsatz	Assemblage pivot bielles	Conjunto perno bielas
25	VS710711641	Insieme braccio verticale	Vertical arm assembly	Vertikalarmsatz	Ensamblage bras vertical	Ensamblado brazo vertical
26	VS710711460	Insieme maniglia	Handle control assembly	Hebelsatz	Assemblage poignée	Conjunto manija
27	VS710590801	Valvola NA	NA valve	Ventil NA	Vanne NA	Válvula NA
28	VS710711510	Insieme guida verticale	Verical guide assembly	Vertikalführungsatz	Assemblage guide vertical	Ensamblado guía vertical
29	VSB5717000	Fascetta stringitubo Cu 18	Cu18 hose clamp	Rohrhalterklemme Cu 18	Collier serre-tuyau Cu 18	Abrazadera ajustatubo Cu 18

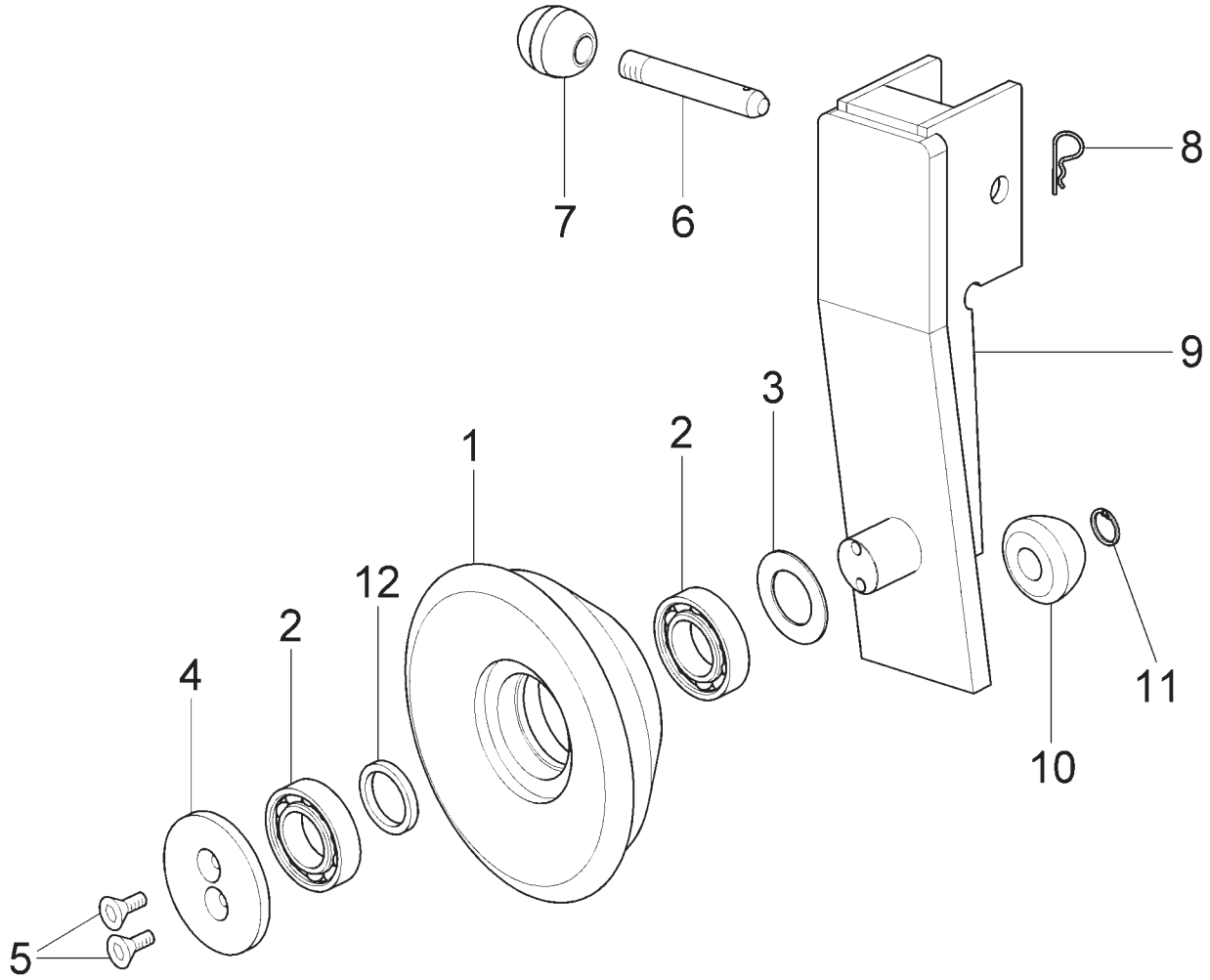

VSC1150.30	VSC1150.30I	VSC1150.30PLUS	VSC1150.30PLUSI	VSC1150.30DOUBLE	VSC1150.30DOUBLEI
OPT	OPT	OPT	OPT	OPT	OPT

PANZITTA SALES & SERVICE
72 George Avenue
Wilkes-Barre, PA 18705
570-822-6720 800-822-6720
www.panzittasales.com

LISTA DEI COMPONENTI - LIST OF COMPONENTS - TEILELISTE
LISTE DES PIECES DETACHEES - LISTA DE PIEZAS

Tavola N°13 - Rev. 0 | **VSG1000A118**

ROLLER FOR MATCHING

7107-R003-2_V

PANZITTA SALES & SERVICE
72 George Avenue
Wilkes-Barre, PA 18705
570-822-6720 800-822-6720
www.panzittasales.com

LISTA DEI COMPONENTI - LIST OF COMPONENTS - TEILELISTE
LISTE DES PIECES DETACHEES - LISTA DE PIEZAS

ROLLER FOR MATCHING

Tavola N°13 - Rev. 0 | **VSG1000A118**

VSC1150.30	VSC1150.30I	VSC1150.30PLUS	VSC1150.30PLUSI	VSC1150.30DOUBLE	VSC1150.30DOUBLEI
OPT	OPT	OPT	OPT	OPT	OPT

N°	Cod.	Descrizione	Description	Beschreibung	Description	Descripción
1	VS710210341	*Rullo*	*Roll*	*Rolle*	*Rouleau*	*Rodillo*
2	VS605014	*Cuscinetto radiale*	*Radial bearing*	*Rundlager*	*Roulement radial*	*Rodamiento radiale*
3	VS237501	*Rondella di spessore*	*Thickness washer*	*Beilagscheibe*	*Rondelle d'épaisseur*	*Arandela de espesor*
4	VSB1340000	*Rondella per rullo*	*Washer for roll*	*Scheibe für Walze*	*Rondelle pour rouleau*	*Arandela para rodillo*
5	VS209019	*VTSPEI M6x16*	*TSPEI M6x16 screw*	*Schraube TSPEI M6x16*	*Vis TSPEI M6x16*	*Tornillo TSPEI M6x16*
6	VS710611450	*Perno per supporto*	*Pin for support*	*Zapfen für Halterung*	*Pivot pour support*	*Perno para soporte*
7	VSB8813000	*Pomolo*	*Knob*	*Knauf*	*Pommeau*	*Pomo*
8	VSB5802000	*Copiglia UNI 8833*	*UNI 8833 split pin*	*Splint UNI 8833*	*Clavette d'arrêt UNI 8833*	*Pasador UNI 8833*
9	VS710712050	*Insieme supporto rullo*	*Roll support assembly*	*Rolleträgersatz*	*Assemblage support rouleau*	*Ensamblado soporte rodillo*
10	VSB2412000	*Rullino*	*Roller*	*Rolle*	*Rouleau*	*Rodillo*
11	VS243006	*Anello 14*	*Ring 14*	*Ring 14*	*Anneau 14*	*Anillo 14*
12	VS710211650	*Anello distanziale*	*Spacer ring*	*Abstandsstückring*	*Anneau entretoise*	*Anillo distanciador*

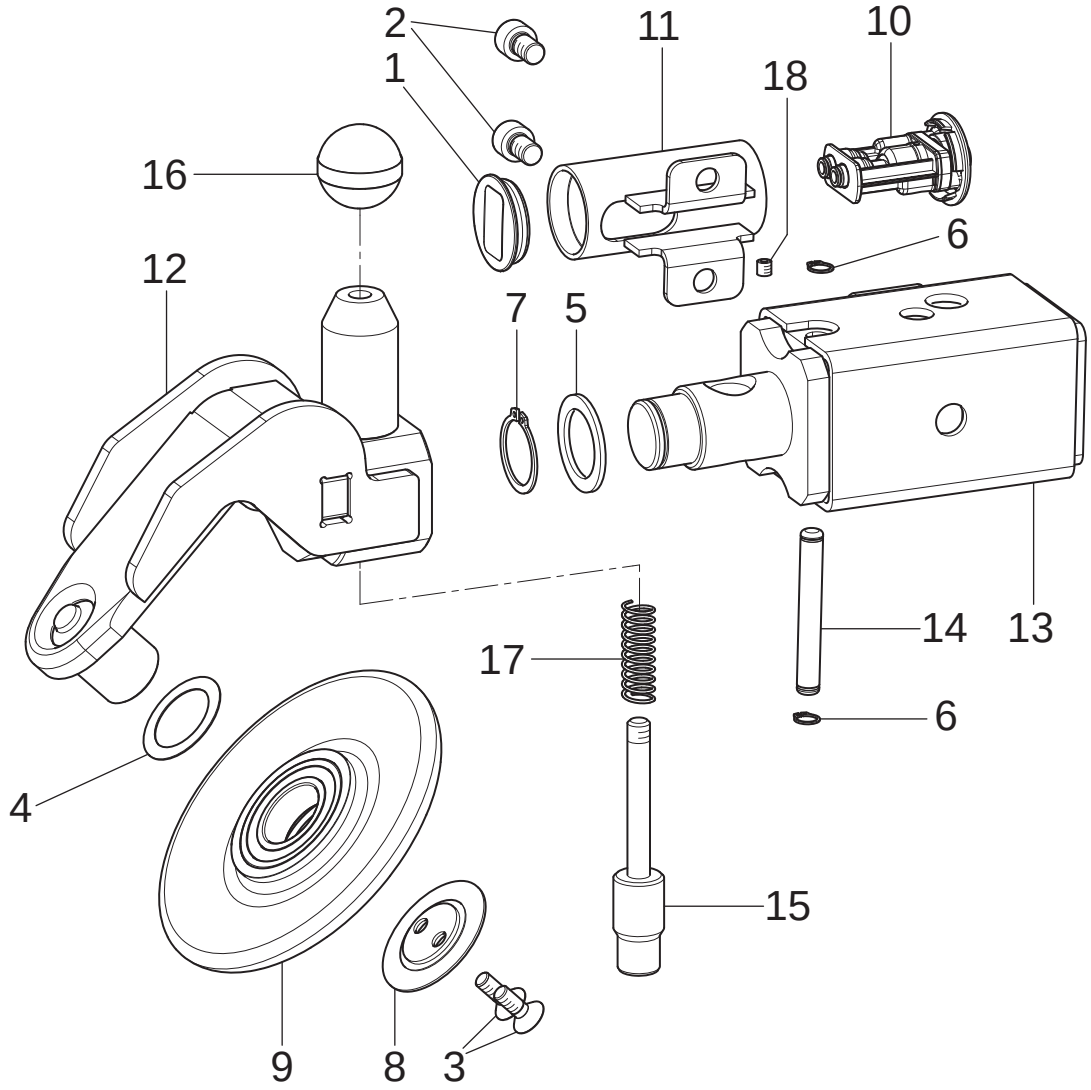

VSC1150.30	VSC1150.30I	VSC1150.30PLUS	VSC1150.30PLUSI	VSC1150.30DOUBLE	VSC1150.30DOUBLEI
•	•	•	•	•	•

PANZITTA SALES & SERVICE
72 George Avenue
Wilkes-Barre, PA 18705
570-822-6720 800-822-6720
www.panzittasales.com

LISTA DEI COMPONENTI - LIST OF COMPONENTS - TEILELISTE
LISTE DES PIECES DETACHEES - LISTA DE PIEZAS

Tavola N°14 - Rev. 1 | **VS710790011**

GUIDE UNIT WITH ROLLER

7107-R003-2_V

PANZITTA SALES & SERVICE
72 George Avenue
Wilkes-Barre, PA 18705
570-822-6720 800-822-6720
www.panzittasales.com

LISTA DEI COMPONENTI - LIST OF COMPONENTS - TEILELISTE
LISTE DES PIECES DETACHEES - LISTA DE PIEZAS

GUIDE UNIT WITH ROLLER

Tavola N°14 - Rev. 1 | **VS710790011**

VSC1150.30	VSC1150.30I	VSC1150.30PLUS	VSC1150.30PLUSI	VSC1150.30DOUBLE	VSC1150.30DOUBLEI
●	●	●	●	●	●

N°	Cod.	Descrizione	Description	Beschreibung	Description	Descripción
1	VSB1695000	*Tappo Ø 30*	*Ø 30 cap*	*Stöpsel Ø 30*	*Bouchon Ø 30*	*Tapa Ø 30*
2	VSB1454000	*VTCEI M8x12*	*TCEI M8x12 screw*	*Schraube TCEI M8x12*	*Vis TCEI M8x12*	*Tornillo TCEI M8x12*
3	VS209019	*VTSPEI M6x16*	*TSPEI M6x16 screw*	*Schraube TSPEI M6x16*	*Vis TSPEI M6x16*	*Tornillo TSPEI M6x16*
4	VS237511	*Rondella di spessore*	*25x35x0,5 shim adjustment*	*Ausgleichscheibe 25x35x0,5*	*Rasage 25x35x0,5*	*Rasamiento 25x35x0,5*
5	VS237525	*Rondella di spessore*	*Thickness washer*	*Beilagscheibe*	*Rondelle d'épaisseur*	*Arandela de espesor*
6	VS243002	*Seeger esterno 8*	*External seeger 8*	*Seeger aussen 8*	*Anneau de retenue extérieur 8*	*Seeger esterno 8*
7	VS243013	*Seeger est. 25*	*External seeger 25*	*Seeger aussen 25*	*Anneau de retenue extérieur 25*	*Seeger esterno 25*
8	VS710010050	*Rondella per rullo*	*Washer for roll*	*Scheibe für Walze*	*Rondelle pour rouleau*	*Arandela para rodillo*
9	VS710090010	*Rullo*	*Roller*	*Rolle*	*Rouleau*	*Rodillo*
10	VS710590801	*Valvola NA*	*NA valve*	*Ventil NA*	*Vanne NA*	*Válvula NA*
11	VS710611580	*Maniglia*	*Handle*	*Griff*	*Poignée*	*Manija*
12	VS710710060	*Insieme testa girevole*	*Slewing head assembly*	*Drehkopfsatz*	*Assemblage tête pivotante*	*Ensamblado cabeza giratoria*
13	VS710710081	*Insieme guida con perno*	*Guide assembly with pin*	*Führungsatz mit Stift*	*Assemblage guide avec pivot*	*Conjunto guía con perno*
14	VS710710750	*Perno D.8*	*D.8 pin*	*Zapfen D.8*	*Pivot D.8*	*Perno D.8*
15	VS710711970	*Nottolino*	*Pawl*	*Sperrzahn*	*Déclic*	*Tope*
16	VSB8813000	*Pomolo sferico D.30*	*D.30 ball knob*	*Knauf D.30*	*Pommeau sphérique D.30*	*Pomo esferico D.30*
17	VSB8830000	*Molla*	*Spring*	*Feder*	*Ressort*	*Resorte*
18	VS213165	*VSTEI M4x6*	*STEI M4x6 screw*	*Schraube STEI M4x6*	*Vis STEI M4x6*	*Tornillo STEI M4x6*

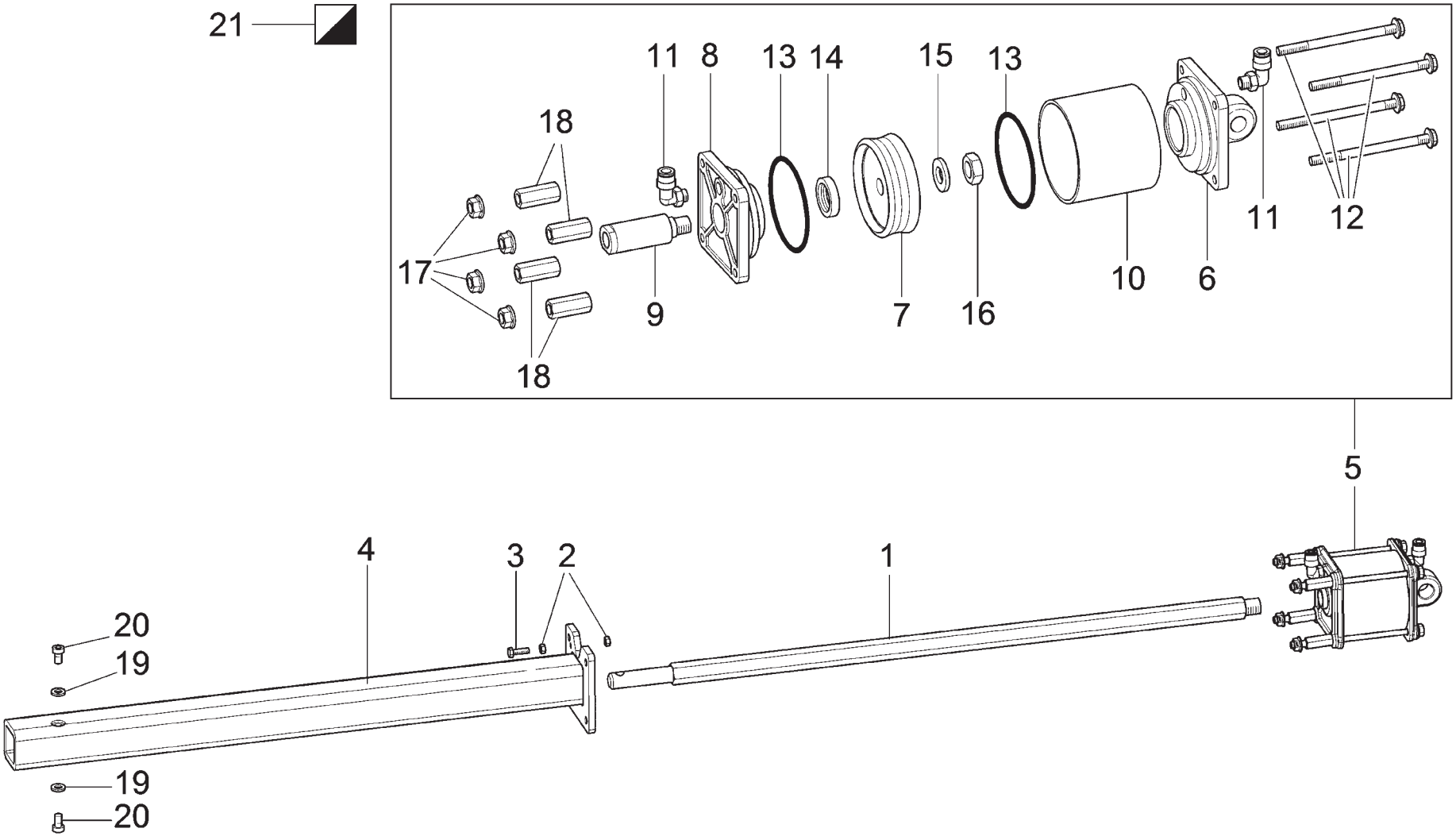

VSC1150.30	VSC1150.30I	VSC1150.30PLUS	VSC1150.30PLUSI	VSC1150.30DOUBLE	VSC1150.30DOUBLEI
•	•	•	•	•	•

PANZITTA SALES & SERVICE
72 George Avenue
Wilkes-Barre, PA 18705
570-822-6720 800-822-6720
www.panzittasales.com

LISTA DEI COMPONENTI - LIST OF COMPONENTS - TEILELISTE
LISTE DES PIECES DETACHEES - LISTA DE PIEZAS

Tavola N°15 - Rev. 1 | **VS710790242**

ARM UNIT WITH CYLINDER

7107-R003-2_V

PANZITTA SALES & SERVICE
72 George Avenue
Wilkes-Barre, PA 18705
570-822-6720 800-822-6720
www.panzittasales.com

LISTA DEI COMPONENTI - LIST OF COMPONENTS - TEILELISTE
LISTE DES PIECES DETACHEES - LISTA DE PIEZAS

ARM UNIT WITH CYLINDER

Tavola N°15 - Rev. 1 | **VS710790242**

VSC1150.30	VSC1150.30I	VSC1150.30PLUS	VSC1150.30PLUSI	VSC1150.30DOUBLE	VSC1150.30DOUBLEI
●	●	●	●	●	●

N°	Cod.	Descrizione	Description	Beschreibung	Description	Descripción
1	VS710712381	*Prolunga stelo*	*Rod extension*	*Stangeverlängerung*	*Rallonge tige*	*Alargue vástago*
2	VS222007	*Dado alto M6*	*M6 high nut*	*Obere Mutter M6*	*Écrou haut M6*	*Tuerca alta M6*
3	VS203128	*VTE M6x30*	*TE M6x30 screw*	*Schraube TE M6x30*	*Vis TE M6x30*	*Tornillo TE M6x30*
4	VS710712371	*Insieme braccio stallonatore*	*Bead breaker arm assembly*	*Abdrückarmsatz*	*Assemblage bras décolle-talons*	*Ensamblado brazo destalonador*
5	VS710491140	*Gruppo cilindro pneumatico*	*Pneumatic cylinder unit*	*Satz pneumatischen Zylinders*	*Groupe cylindre pneumatique*	*Grupo cilindro neumático*
6	VS710112530	*Flangia posteriore*	*Rear flange*	*Hinteres Flansch*	*Bride postérieur*	*Brida posterior*
7	VS321027	*Pistone*	*Piston*	*Kolben*	*Piston*	*Pistón*
8	VS710112540	*Flangia anteriore*	*Front flange*	*Vordere Flansch*	*Bride antérieur*	*Brida anteriore*
9	VS710414010	*Stelo D.25*	*D.25 rod*	*Stange D.25*	*Tige D.25*	*Vástago D.25*
10	VS710413990	*Canna*	*Barrel*	*Rohr*	*Gaine*	*Caño*
11	VS325178	*Raccordo*	*Union*	*Anschluss*	*Raccord*	*Enlace*
12	VS710416530	*Tirante cilindro camma*	*Cam cylinder tie rod*	*Zylinderspannstange Nocke*	*Tirant cylindre camme*	*Jalador cilindro leva*
13	VS401216	*OR*	*OR*	*OR*	*OR*	*OR*
14	VS403123	*Guarnizione*	*Gasket*	*Dichtung*	*Joint*	*Junta*
15	VS236007	*Rondella piana 10,5x21x2*	*Fe 10,5x21x2 washer*	*Ebene Scheibe 10,5x21x2*	*Rondelle Fe 10,5x21x2*	*Roseta Fe 10,5x21x2*
16	VS228022	*Dado autobloccante basso M10*	*M10 low self-locking nut*	*Untere Selbstmutter M10*	*Écrou auto-bloquant bas M10*	*Tuerca autoblocante bajo M10*
17	VS228302	*Dado biblock M8*	*M8 biblock nut*	*Biblock Mutter M8*	*Écrou biblock M8*	*Tuerca biblock M8*
18	VS710416520	*Colonnetta M8x35*	*M8x35 colunm*	*Dorn M8x35*	*Petite colonne M8x35*	*Columnita M8x35*
19	VS238044	*Rondella elastica*	*Elastic washer*	*Elastikscheibe*	*Rondelle elastique*	*Arandela elástica*
20	VS206511	*VTCEI M8x10*	*TCEI M8x10 screw*	*Schraube TCEI M8x10*	*Vis TCEI M8x10*	*Tornillo TCEI M8x10*
21	VSGU4890	*Kit guarnizione cilindro D.90*	*Cylinder gasket kit D.90*	*Zylinderdichtungenset D.90*	*Kit joint cylindre D.90*	*Kit junta cilindro D.90*

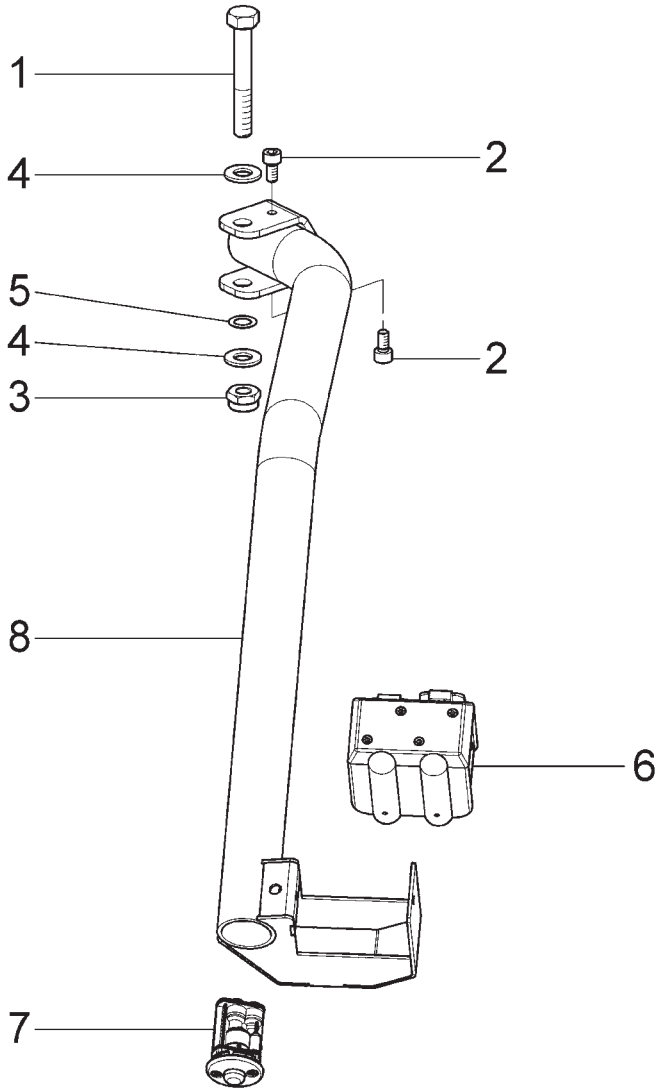

VSC1150.30	VSC1150.30I	VSC1150.30PLUS	VSC1150.30PLUSI	VSC1150.30DOUBLE	VSC1150.30DOUBLEI
•	•	•	•	•	•

PANZITTA SALES & SERVICE
72 George Avenue
Wilkes-Barre, PA 18705
570-822-6720 800-822-6720
www.panzittasales.com

LISTA DEI COMPONENTI - LIST OF COMPONENTS - TEILELISTE
LISTE DES PIECES DETACHEES - LISTA DE PIEZAS

Tavola N°16 - Rev. 1 | **VS710790210**

CONTROLS UNIT

7107-R003-2_V

PANZITTA SALES & SERVICE
72 George Avenue
Wilkes-Barre, PA 18705
570-822-6720 800-822-6720
www.panzittasales.com

LISTA DEI COMPONENTI - LIST OF COMPONENTS - TEILELISTE
LISTE DES PIECES DETACHEES - LISTA DE PIEZAS

CONTROLS UNIT

Tavola N°16 - Rev. 1 | **VS710790210**

VSC1150.30	VSC1150.30I	VSC1150.30PLUS	VSC1150.30PLUSI	VSC1150.30DOUBLE	VSC1150.30DOUBLEI
●	●	●	●	●	●

N°	Cod.	Descrizione	Description	Beschreibung	Description	Descripción
1	VS201182	*VTE M10x70*	*TE M10x70 screw*	*Schraube TE M10x70*	*Vis TE M10x70*	*Tornillo TE M10x70*
2	VS206188	*VTCEI M6x12*	*TCEI M6x12 screw*	*Schraube TCEI M6x12*	*Vis TCEI M6x12*	*Tornillo TCEI M6x12*
3	VS228022	*Dado autobloccante basso M10*	*M10 low self-locking nut*	*Untere Selbstmutter M10*	*Écrou auto-bloquant bas M10*	*Tuerca autoblocante bajo M10*
4	VS236007	*Rondella piana 10,5x21x2*	*Fe 10,5x21x2 washer*	*Ebene Scheibe 10,5x21x2*	*Rondelle Fe 10,5x21x2*	*Roseta Fe 10,5x21x2*
5	VS237517	*Rasamento 10x16x0,5*	*10x16x0,5 shim adjustment*	*Ausgleichscheibe 10x16x0,5*	*Rasage 10x16x0,5*	*Rasamiento 10x16x0,5*
6	VS710690630	*Scatola comandi*	*Control box*	*Befehlskasten*	*Boîte commandes*	*Caja de comandos*
7	VS710590801	*Valvola NA*	*NA valve*	*Ventil NA*	*Vanne NA*	*Válvula NA*
8	VS710712230	*Insieme tubo comando*	*Control pipe assembly*	*Befehlungschlauchsatz*	*Assemblage tuyau commande*	*Ensamblado tubo mando*

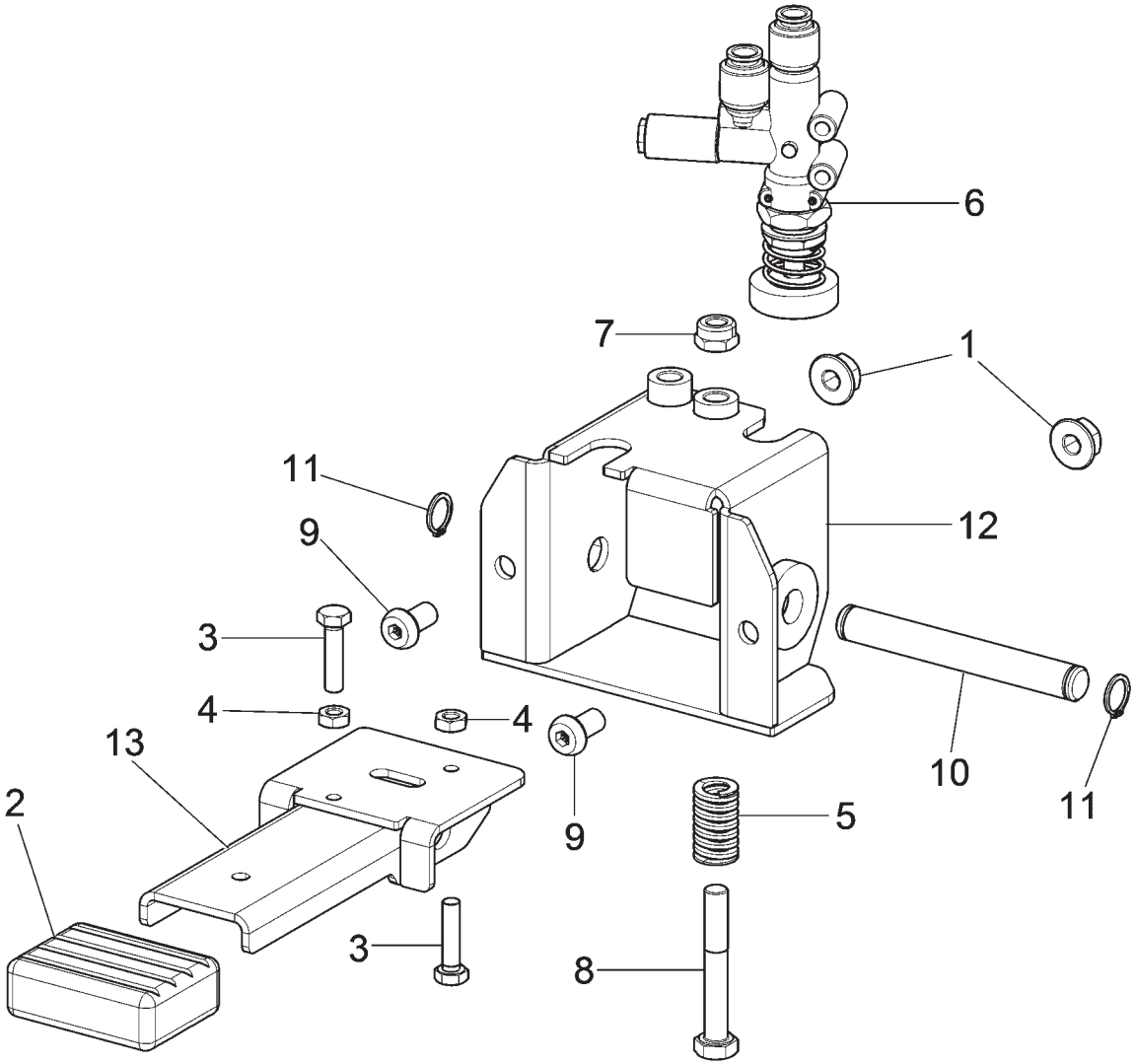

VSC1150.30	VSC1150.30I	VSC1150.30PLUS	VSC1150.30PLUSI	VSC1150.30DOUBLE	VSC1150.30DOUBLEI
•		•		•	

PANZITTA SALES & SERVICE
72 George Avenue
Wilkes-Barre, PA 18705
570-822-6720 800-822-6720
www.panzittasales.com

LISTA DEI COMPONENTI - LIST OF COMPONENTS - TEILELISTE
LISTE DES PIECES DETACHEES - LISTA DE PIEZAS

Tavola N°17A - Rev. 0 | **VS710690600**

INFLATION PEDALBOARD UNIT + NOI

PANZITTA SALES & SERVICE
72 George Avenue
Wilkes-Barre, PA 18705
570-822-6720 800-822-6720
www.panzittasales.com

LISTA DEI COMPONENTI - LIST OF COMPONENTS - TEILELISTE
LISTE DES PIECES DETACHEES - LISTA DE PIEZAS

INFLATION PEDALBOARD UNIT + NOI

Tavola N°17A - Rev. 0 | **VS710690600**

VSC1150.30	VSC1150.30I	VSC1150.30PLUS	VSC1150.30PLUSI	VSC1150.30DOUBLE	VSC1150.30DOUBLEI
●		●		●	

N°	Cod.	Descrizione	Description	Beschreibung	Description	Descripción
1	VS228501	*Dado flangiato M8*	*M8 flanged nut*	*Flanschmutter M8*	*Écrou flangé M8*	*Tuerca rebordeado M8*
2	VSB0173000	*Tappo protezione pedale*	*Pedal protection plug*	*Pedalschutzstöpsel*	*Bouchon protection pédale*	*Tapa protección pedal*
3	VS203021	*VTE M6x20*	*TE M6x20 screw*	*Schraube TE M6x20*	*Vis TE M6x20*	*Tornillo TE M6x20*
4	VS226007	*Dado basso M6*	*M6 low nut*	*Untere Mutter M6*	*Écrou bas M6*	*Tuerca baja M6*
5	VS299161	*Molla*	*Spring*	*Feder*	*Ressort*	*Resorte*
6	VSB2989000	*Valvola 3-2 piattello D.30*	*3-2 valve D.30 pan*	*Ventil 3-2 Scheibe D.30*	*Vanne 3-2 plateau D.30*	*Válvula 3-2 platillo D.30*
7	VS228017	*Dado autob. basso M8x1,25*	*M8x1,25 self-locking low nut*	*Untere Selbstmutter M8x1,25*	*Écrou auto-bloquant bas M8x1,25*	*Tuerca autoblocante bajo M8x1,25*
8	VSB1252400	*VTE M8x60*	*TE M8x60 screw*	*Schraube TE M8x60*	*Vis TE M8x60*	*Tornillo TE M8x60*
9	VSB1367300	*VTBEI M8x16*	*TBEI M8x16 screw*	*Schraube TBEI M8x16*	*Vis TBEI M8x16*	*Tornillo TBEI M8x16*
10	VS710613150	*Perno pedaliera*	*Pedalboard pin*	*Pedalleistenzapfen*	*Pivot pédales de direction*	*Perno pedalera*
11	VS243005	*Seeger est.12*	*Ring 12*	*Ring 12*	*Anneau 12*	*Anillo 12*
12	VS710613180	*Corpo pedaliera*	*Pedalboard body*	*Pedalleistekörper*	*Corps pédales de direction*	*Cuerpo pedalera*
13	VS710613190	*Pedale*	*Pedal*	*Pedal*	*Pédale*	*Pedal*

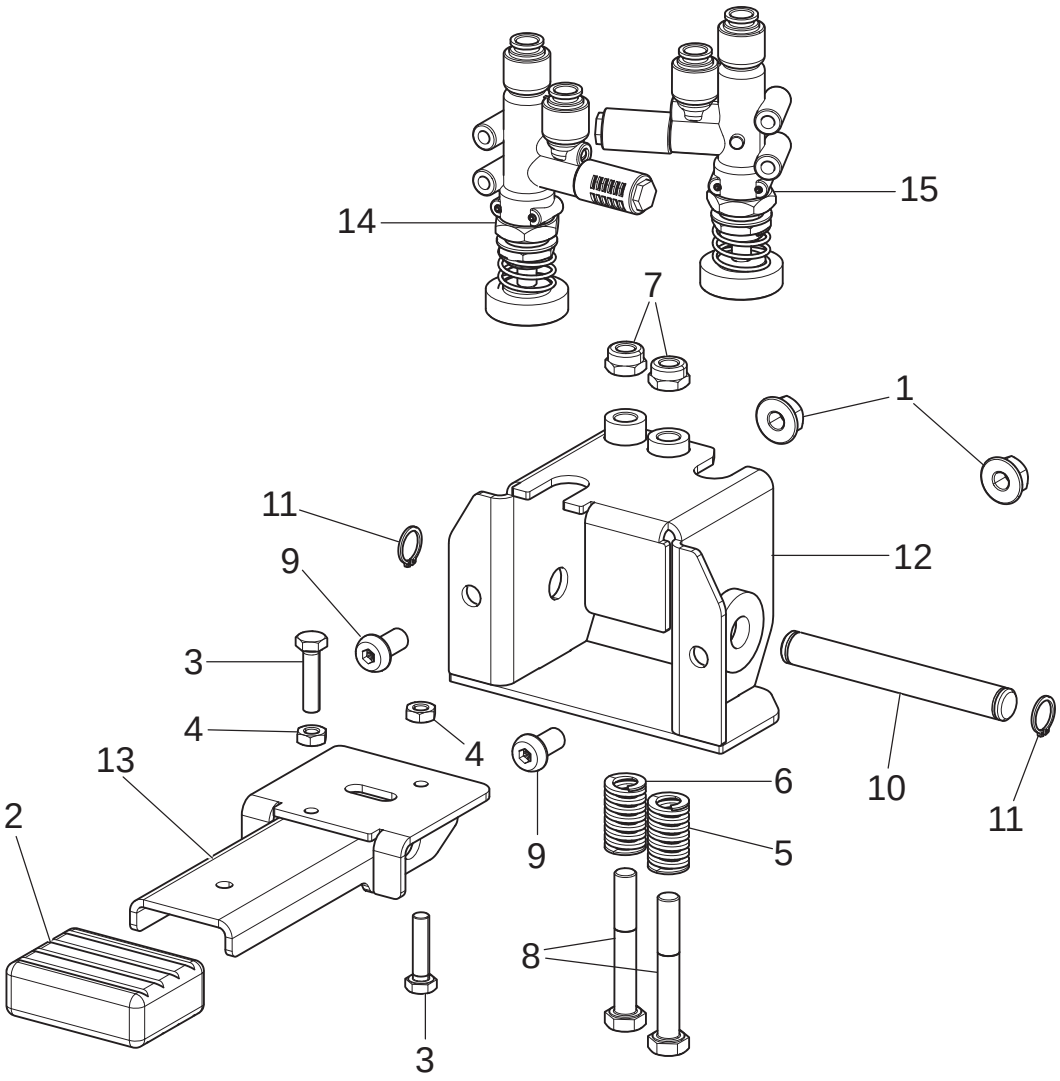

VSC1150.30	VSC1150.30I	VSC1150.30PLUS	VSC1150.30PLUSI	VSC1150.30DOUBLE	VSC1150.30DOUBLEI
	•		•		•

PANZITTA SALES & SERVICE
72 George Avenue
Wilkes-Barre, PA 18705
570-822-6720 800-822-6720
www.panzittasales.com

LISTA DEI COMPONENTI - LIST OF COMPONENTS - TEILELISTE
LISTE DES PIECES DETACHEES - LISTA DE PIEZAS

Tavola N°17B - Rev. 0 | **VS710690610**

INFLATION PEDALBOARD UNIT

PANZITTA SALES & SERVICE
72 George Avenue
Wilkes-Barre, PA 18705
570-822-6720 800-822-6720
www.panzittasales.com

LISTA DEI COMPONENTI - LIST OF COMPONENTS - TEILELISTE
LISTE DES PIECES DETACHEES - LISTA DE PIEZAS

INFLATION PEDALBOARD UNIT

Tavola N°17B - Rev. 0 | **VS710690610**

VSC1150.30	VSC1150.30I	VSC1150.30PLUS	VSC1150.30PLUSI	VSC1150.30DOUBLE	VSC1150.30DOUBLEI
	●		●		●

N°	Cod.	Descrizione	Description	Beschreibung	Description	Descripción
1	VS228501	*Dado flangiato M8*	*M8 flanged nut*	*Flanschmutter M8*	*Écrou flangé M8*	*Tuerca rebordeado M8*
2	VSB0173000	*Tappo protezione pedale*	*Pedal protection plug*	*Pedalschutzstöpsel*	*Bouchon protection pédale*	*Tapa protección pedal*
3	VS203021	*VTE M6x20*	*TE M6x20 screw*	*Schraube TE M6x20*	*Vis TE M6x20*	*Tornillo TE M6x20*
4	VS226007	*Dado basso M6*	*M6 low nut*	*Untere Mutter M6*	*Écrou bas M6*	*Tuerca baja M6*
5	VS299161	*Molla*	*Spring*	*Feder*	*Ressort*	*Resorte*
6	VS299177	*Molla*	*Spring*	*Feder*	*Ressort*	*Resorte*
7	VS228017	*Dado autob. basso M8x1,25*	*M8x1,25 self-locking low nut*	*Untere Selbstmutter M8x1,25*	*Écrou auto-bloquant bas M8x1,25*	*Tuerca autoblocante bajo M8x1,25*
8	VSB1252400	*VTE M8x60*	*TE M8x60 screw*	*Schraube TE M8x60*	*Vis TE M8x60*	*Tornillo TE M8x60*
9	VSB1367300	*VTBEI M8x16*	*TBEI M8x16 screw*	*Schraube TBEI M8x16*	*Vis TBEI M8x16*	*Tornillo TBEI M8x16*
10	VS710613150	*Perno pedaliera*	*Pedalboard pin*	*Pedalleistenzapfen*	*Pivot pédales de direction*	*Perno pedalera*
11	VS243005	*Seeger est.12*	*Ring 12*	*Ring 12*	*Anneau 12*	*Anillo 12*
12	VS710613180	*Corpo pedaliera*	*Pedalboard body*	*Pedalleistekörper*	*Corps pédales de direction*	*Cuerpo pedalera*
13	VS710613190	*Pedale*	*Pedal*	*Pedal*	*Pédale*	*Pedal*
14	VS710090340	*Valvole 3/2*	*3/2 valves*	*Ventilen 3/2*	*Vannes 3/2*	*Válvulas 3/2*
15	VSB2989000	*Valvola 3-2 piattello D.30*	*3-2 valve D.30 pan*	*Ventil 3-2 Scheibe D.30*	*Vanne 3-2 plateau D.30*	*Válvula 3-2 platillo D.30*

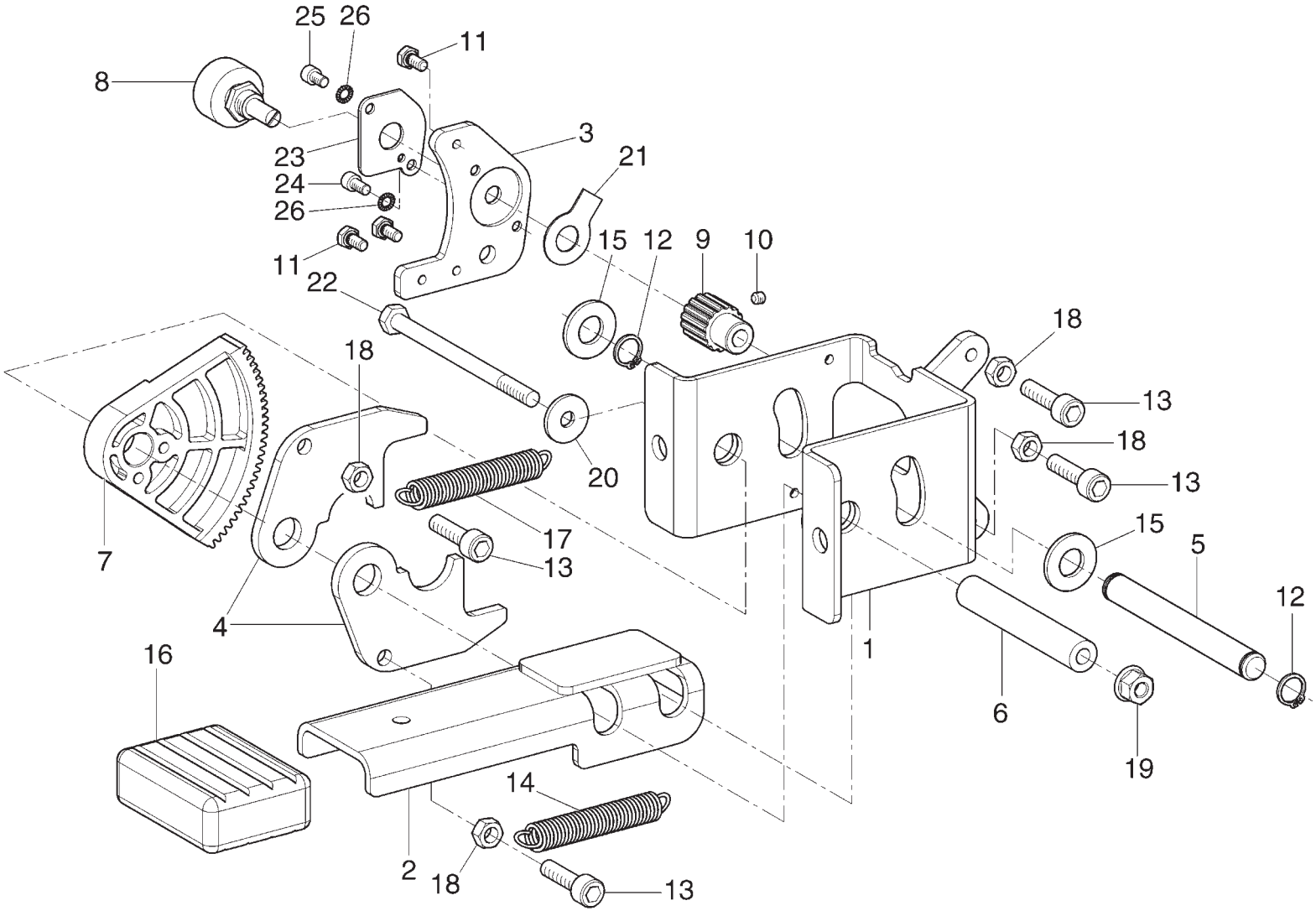

VSC1150.30	VSC1150.30I	VSC1150.30PLUS	VSC1150.30PLUSI	VSC1150.30DOUBLE	VSC1150.30DOUBLEI
•	•	•	•	•	•

PANZITTA SALES & SERVICE
72 George Avenue
Wilkes-Barre, PA 18705
570-822-6720 800-822-6720
www.panzittasales.com

LISTA DEI COMPONENTI - LIST OF COMPONENTS - TEILELISTE
LISTE DES PIECES DETACHEES - LISTA DE PIEZAS

Tavola N°18 - Rev. 0 | **VS710490401**

PEDALBOARD FOR INVERTER

PANZITTA SALES & SERVICE
72 George Avenue
Wilkes-Barre, PA 18705
570-822-6720 800-822-6720
www.panzittasales.com

LISTA DEI COMPONENTI - LIST OF COMPONENTS - TEILELISTE
LISTE DES PIECES DETACHEES - LISTA DE PIEZAS

PEDALBOARD FOR INVERTER

Tavola N°18 - Rev. 0 | **VS710490401**

VSC1150.30	VSC1150.30I	VSC1150.30PLUS	VSC1150.30PLUSI	VSC1150.30DOUBLE	VSC1150.30DOUBLEI
●	●	●	●	●	●

N°	Cod.	Descrizione	Description	Beschreibung	Description	Descripción
1	VS710412801	Supporto pedale	Pedal support	Pedalhalterung	Support pédale	Soporte pedal
2	VS710412900	Pedale saldato	Welded pedal	Geschweißtes Pedal	Pédale soudé	Pedal soldado
3	VS710412820	Supporto pontenziometro	Potentiometer support	Potenziometershalterung	Support potentiométre	Soporte potenciómetro
4	VS710412830	Leva per settore	Lever for sector	Hebel für Sektor	Levier pour secteur	Leva para sector
5	VS710412840	Perno pedaliera	Pedal board pin	Pedalleistenzapfen	Pivot pédales de direction	Perno pedalera
6	VS710413000	Perno pedaliera	Pedalboard pin	Pedalleistenzapfen	Pivot pédales de direction	Perno pedalera
7	VS710411670	Settore dentato	Toothed sector	Zahnbereich	Secteur denté	Sector dentado
8	VS710565010	Cavo potenziometro	Potentiometer cable	Potenziometerkabel	Câble potentiomètre	Cable potenciómetro
9	VS730011050	Pignone D.17	D.17 pinion gear	Ritzel D.17	Pignon D.17	Piñon D.17
10	VS213485	VSTEI M4x4	STEI M4x4 screw	Schraube STEI M4x4	Vis STEI M4x4	Tornillo STEI M4x4
11	VS203228	VTE M4x8	TE M4x8 screw	Schraube TE M4x8	Vis TE M4x8	Tornillo TE M4x8
12	VS243005	Anello 12	Ring 12	Ring 12	Anneau 12	Anillo 12
13	VS206408	VTCEI M6x22	TCEI M6x22 screw	Schraube TCEI M6x22	Vis TCEI M6x22	Tornillo TCEI M6x22
14	VSB1309900	Molla T 1,2x9,5x64 Zn	1,2x9,5x64 Zn T spring	Feder T 1,2x9,5x64 Zn	Ressort T 1,2x9,5x64 Zn	Resorte T 1,2x9,5x64 Zn
15	VSB0472000	Rosetta FE 12.3x22x2	FE 12.3x22x2 washer	Rosette FE 12.3x22x2	Rondelle FE 12.3x22x2	Roseta FE 12.3x22x2
16	VSB0173000	Tappo protezione pedale	Pedal protection plug	Pedalschutzstöpsel	Bouchon protection pédale	Tapa protección pedal
17	VS918017	Molla TRZ	TRZ spring	Feder TRZ	Ressort TRZ	Resorte TRZ
18	VS222007	Dado alto M6	M6 high nut	Obere Mutter M6	Écrou haut M6	Tuerca alta M6
19	VSB4137000	Dado biblock M6	M6 biblock nut	Biblock Mutter M6	Écrou biblock M6	Tuerca biblock M6
20	VS237011	Rondella piana ø6x18	ø6x18 flat washer	Scheibe ø6x18	Rondelle plane ø6x18	Arandela plana ø6x18
21	VS790011970	Rosetta di sicurezza	Safety washer	Sicherheitsrosette	Rondelle de sécurité	Roseta de seguridad
22	VS201414	VTE M6x90	TE M6x90 screw	Schraube TE M6x90	Vis TE M6x90	Tornillo TE M6x90
23	VS710613460	Piastrina	Plate	Platte	Plaquette	Plaquette
24	VS206228	VTCEI M4x8	TCEI M4x8 screw	Schraube TCEI M4x8	Vis TCEI M4x8	Tornillo TCEI M4x8
25	VS206347	VTCEI M4x6	TCEI M4x6 screw	Schraube TCEI M4x6	Vis TCEI M4x6	Tornillo TCEI M4x6
26	VS239018	Rosetta dentata 4,3	4,3 toothed washer	Zahnrosette 4,3	Rondelle dentée 4,3	Roseta dentada 4,3

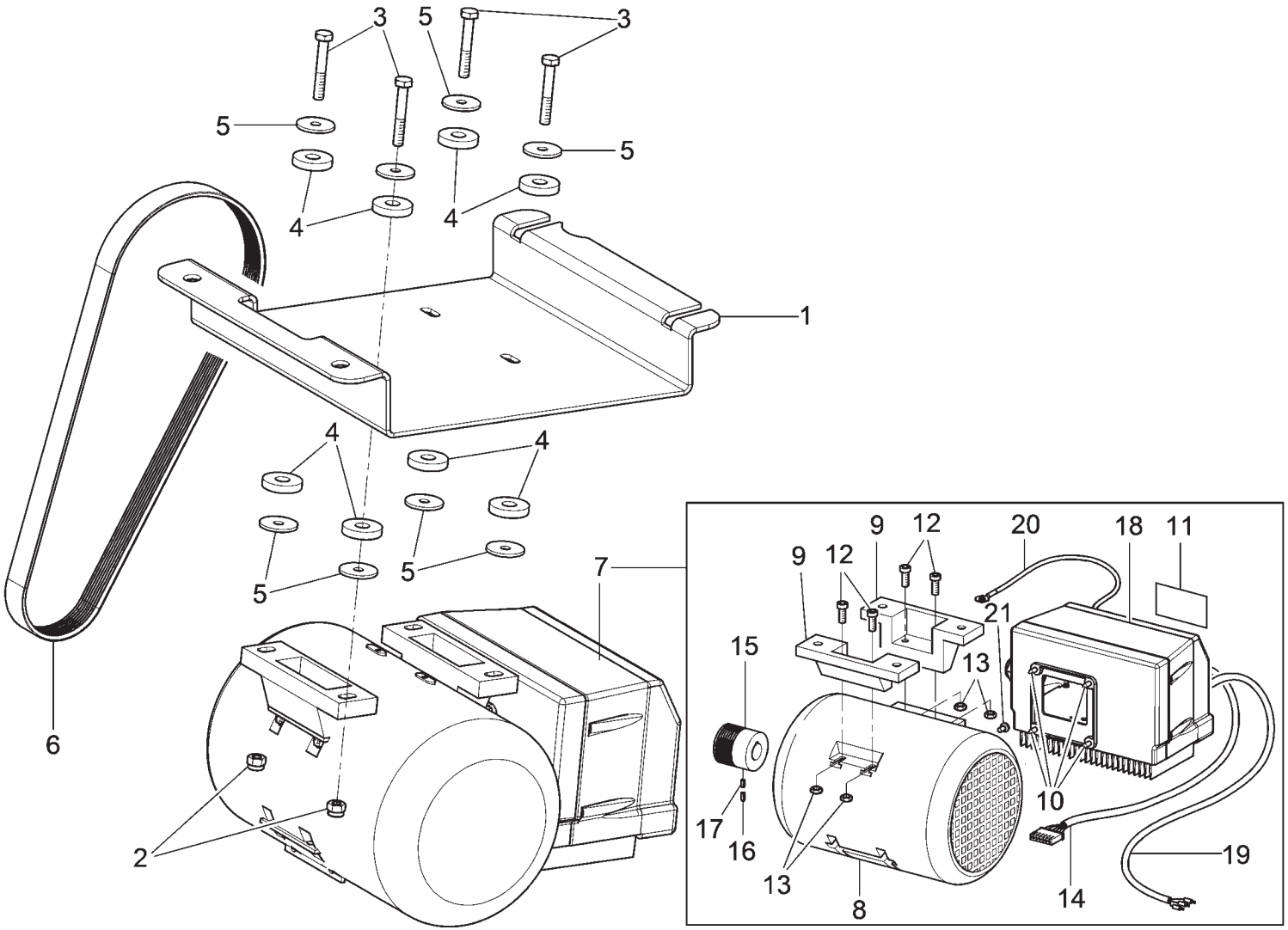

VSC1150.30	VSC1150.30I	VSC1150.30PLUS	VSC1150.30PLUSI	VSC1150.30DOUBLE	VSC1150.30DOUBLEI
•	•	•	•	•	•

PANZITTA SALES & SERVICE
72 George Avenue
Wilkes-Barre, PA 18705
570-822-6720 800-822-6720
www.panzittasales.com

LISTA DEI COMPONENTI - LIST OF COMPONENTS - TEILELISTE
LISTE DES PIECES DETACHEES - LISTA DE PIEZAS

Tavola N°19 - Rev. 0 | **VS710790430**

INVERTER MOTOR UNIT

7107-R003-2_V

PANZITTA SALES & SERVICE
72 George Avenue
Wilkes-Barre, PA 18705
570-822-6720 800-822-6720
www.panzittasales.com

LISTA DEI COMPONENTI - LIST OF COMPONENTS - TEILELISTE
LISTE DES PIECES DETACHEES - LISTA DE PIEZAS

INVERTER MOTOR UNIT

Tavola N°19 - Rev. 0 | **VS710790430**

VSC1150.30	VSC1150.30I	VSC1150.30PLUS	VSC1150.30PLUSI	VSC1150.30DOUBLE	VSC1150.30DOUBLEI
●	●	●	●	●	●

N°	Cod.	Descrizione	Description	Beschreibung	Description	Descripción
1	VS710712650	Supporto motore	Motor support	Träger Motor	Support moteur	Soporte motoriii'i
2	VS228010	Dado autobloccante M6	M6 autoblock nut	Autoblock Mutter M6	Écrou autoblock M6	Tuerca autoblock M6
3	VS201094	VTE M6x40	TE M6x40 screw	Schraube TE M6x40	Vis TE M6x40	Tornillo TE M6x40
4	VS412081	Rondella gomma	Rubber washer	Gummischeibe	Rondelle en caoutchouc	Arandela en goma
5	VS237046	Rondella piana 6x24x2	6x24x2 flat washer	EbeneScheibe 6x24x2	Rondelle plane 6x24x2	Arandela plana 6x24x2
6	VS412107	Cinghia	Belt	Riemen	Courroie	Cinta
7	VS710790440	Gruppo motore + inverter	Motor unit + inverter	Motorsatz + Frequenumformer	Groupe moteur + variateur	Grupo motor + inversor
8	VS900003720	Motore 0,75 kW	0,75 kW motor	Motor 0,75 kW	Moteur 0,75 kW	Motor 0,75 kW
9	VS900003730	Piedino smontabile motore	Motor removable foot	Motorzerlegbarfuß	Pieds démontable moteur	Pié desmontable motor
10	VS220030	VTCB autofilettante	TCB screw	Schraube TCB	Vis TCB	Vis TCB
11	VS999916011	Targhetta motoinverter	Motoinverter plate	Motoinverterschild	Plaquette motoinverter	Placa motoinverter
12	VS206209	VTCEI M5x25	TCEI M5x25 screw	Schraube TCEI M5x25	Vis TCEI M5x25	Tornillo TCEI M5x25
13	VS224005	Dado medio M5	M5 middle nut	Mittlere Mutter M5	Écrou moyen M5	Tuerca media M5
14	VS710565020	Cavo segnali inverter	Inverter signal cable	Kabel Signalen inverter	Câble signaux inverter	Cable señales inverter
15	VS730014030	Puleggia	Pulley	Riemenscheibe	Poulie	Polea
16	VS210148	VSTEI M5x6	STEI M5x6 screw	Schraube STEI M5x6	Vis STEI M5x6	Tornillo STEI M5x6
17	VS213378	VSTEI M5x6	STEI M5x6 screw	Schraube STEI M5x6	Vis STEI M5x6	Tornillo STEI M5x6
18	VS710590964	Inverter	Inverter	Frequenumformer	Variateur	Inversor
19	VS730065031	Cavo alimentazione	Power cable	Speisungkabel	Câble alimentation	Cable alimentación
20	VS710065351	Cavo terra	Ground cable	Erdekabel	Câble sol	Cable tierra
21	VS270228	VTCB M4x8	TCB M4x8 screw	Schraube TCB M4x8	Vis TCB M4x8	Tornillo TCB M4x8

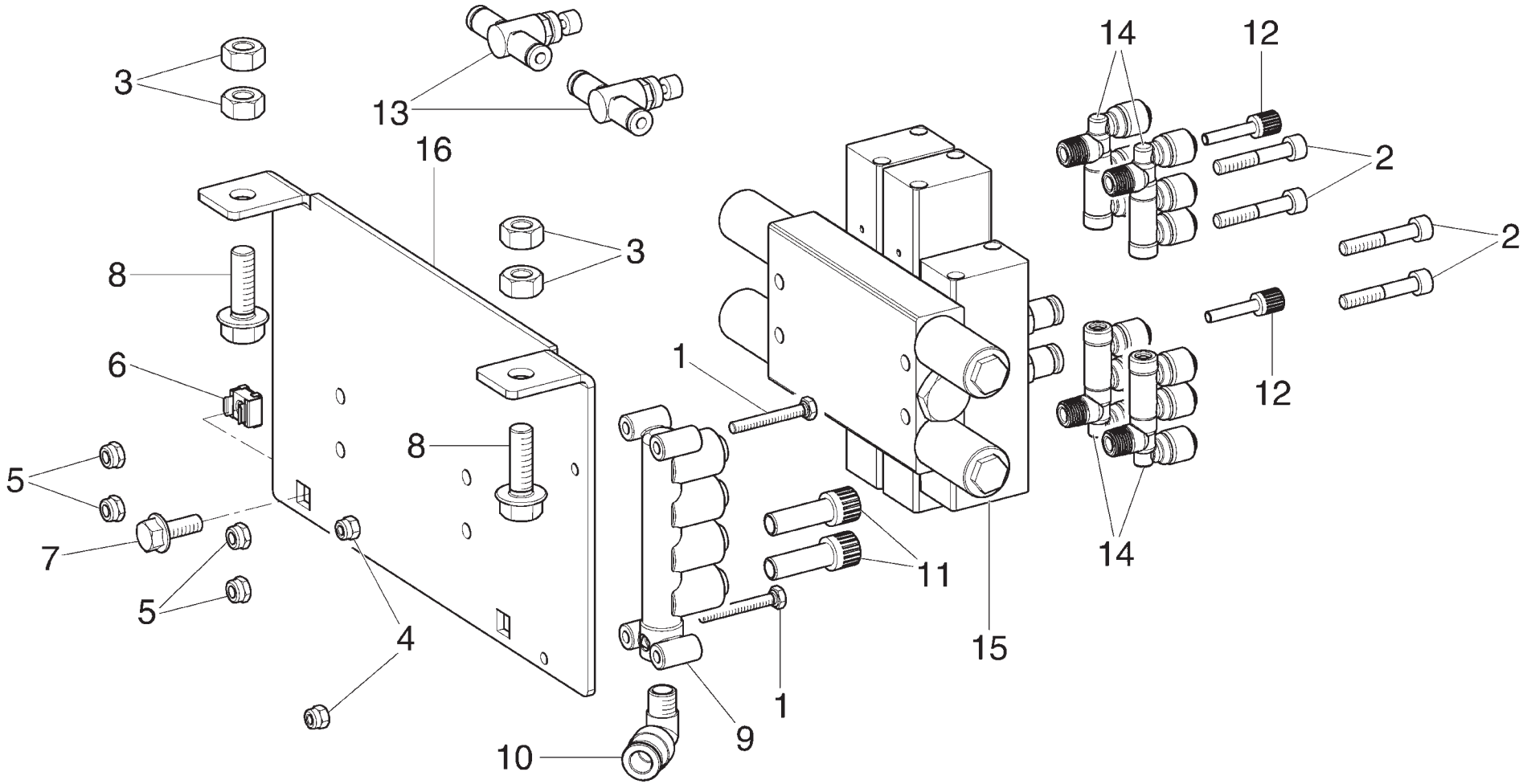

VSC1150.30	VSC1150.30I	VSC1150.30PLUS	VSC1150.30PLUSI	VSC1150.30DOUBLE	VSC1150.30DOUBLEI
•	•	•	•	•	•

PANZITTA SALES & SERVICE
72 George Avenue
Wilkes-Barre, PA 18705
570-822-6720 800-822-6720
www.panzittasales.com

LISTA DEI COMPONENTI - LIST OF COMPONENTS - TEILELISTE
LISTE DES PIECES DETACHEES - LISTA DE PIEZAS

Tavola N°20 - Rev. 0 | **VS710790110**

PNEUMATIC UNIT + UNION

PANZITTA SALES & SERVICE
72 George Avenue
Wilkes-Barre, PA 18705
570-822-6720 800-822-6720
www.panzittasales.com

LISTA DEI COMPONENTI - LIST OF COMPONENTS - TEILELISTE
LISTE DES PIECES DETACHEES - LISTA DE PIEZAS

PNEUMATIC UNIT + UNION

Tavola N°20 - Rev. 0 | **VS710790110**

VSC1150.30	VSC1150.30I	VSC1150.30PLUS	VSC1150.30PLUSI	VSC1150.30DOUBLE	VSC1150.30DOUBLEI
●	●	●	●	●	●

N°	Cod.	Descrizione	Description	Beschreibung	Description	Descripción
1	VS203356	VTE M4x30	TE M4x30 screw	Schraube TE M4x30	Vis TE M4x30	Tornillo TE M4x30
2	VS206124	VTCEI M5x30	TCEI M5x30 screw	Schraube TCEI M5x30	Vis TCEI M5x30	Tornillo TCEI M5x30
3	VS224009	Dado esagonale medio M8	M8 middle hexagonal nut	Mittlere sechswinkling Mutter M8	Écrou hexagonal moyen M8	Tuerca hexagonal medio M8
4	VS228023	Dado autobloccante M4	M4 self-locking nut	Mutter selbstsperrend M4	Écrou auto-bloquant M4	Tuerca autoblocante M4
5	VS228038	Dado autobloccante basso M5	M5 low self-locking nut	Untere Selbstmutter M5	Écrou auto-bloquant bas M5	Tuerca autoblocante bajo M5
6	VS228250	Dado in gabbia M6	M6 crated nut	Käfigmutter M6	Écrou en cage M6	Tuerca en jaula M6
7	VS272019	VTE M6x16	TE M6x16 screw	Schraube TE M6x16	Vis TE M6x16	Tornillo TE M6x16
8	VS272038	VTE M8x25	TE M8x25 screw	Schraube TE M8x25	Vis TE M8x25	Tornillo TE M8x25
9	VSB2850010	Blocchetto 5 vie	5-way block	Klötzchen 5 Weg	Petit block 5 voies	Bloque 5 vie
10	VS325018	Racc. 8 - 1/8”	8 – 1/8” union	Verbindung 8 – 1/8”	Raccord 8 – 1/8”	Enlace 8 – 1/8”
11	VS325151	Raccordo chiusura	Closing union	Verschlussanschluss	Raccord fermerture	Conector cerrado
12	VS325154	Raccordo tappo	Cap union	Stöpsel Anschluss	Raccord bouchon	Conector tapa
13	VS399286	Regolatore di flusso	Flow regulator	Flussregel	Regulateur de débit	Regulación de flujo
14	VS710590810	Valvola OR	OR valve	Ventil OR	Vanne OR	Válvula OR
15	VS710611050	Base + valvole	Base + valves	Sockel + Ventil	Embase + vannes	Base + válvulas
16	VS710612410	Lama valvola	Valve blade	Ventilsklinge	Lame vanne	Cuchilla válvula

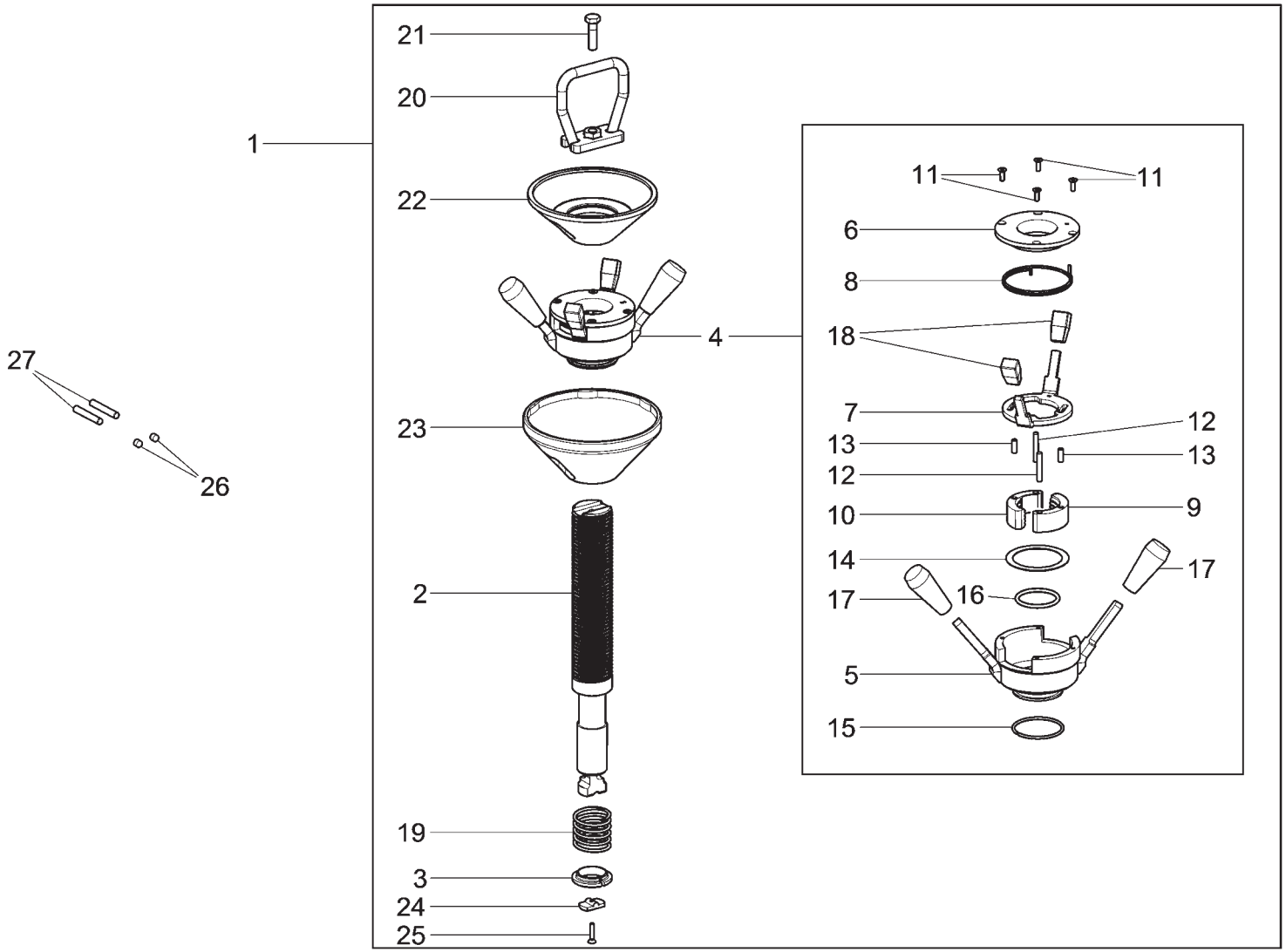

VSC1150.30	VSC1150.30I	VSC1150.30PLUS	VSC1150.30PLUSI	VSC1150.30DOUBLE	VSC1150.30DOUBLEI
•	•	•	•	•	•

PANZITTA SALES & SERVICE
72 George Avenue
Wilkes-Barre, PA 18705
570-822-6720 800-822-6720
www.panzittasales.com

LISTA DEI COMPONENTI - LIST OF COMPONENTS - TEILELISTE
LISTE DES PIECES DETACHEES - LISTA DE PIEZAS

Tavola N°21 - Rev. 0 | **VSG1000A138**

HARNESS KIT FOR SHORT SHAFT

PANZITTA SALES & SERVICE
72 George Avenue
Wilkes-Barre, PA 18705
570-822-6720 800-822-6720
www.panzittasales.com

LISTA DEI COMPONENTI - LIST OF COMPONENTS - TEILELISTE
LISTE DES PIECES DETACHEES - LISTA DE PIEZAS

HARNESS KIT FOR SHORT SHAFT

Tavola N°21 - Rev. 0 | **VSG1000A138**

VSC1150.30	VSC1150.30I	VSC1150.30PLUS	VSC1150.30PLUSI	VSC1150.30DOUBLE	VSC1150.30DOUBLEI
●	●	●	●	●	●

N°	Cod.	Descrizione	Description	Beschreibung	Description	Descripción
1	VS730093670	Gruppo albero di bloccaggio	Locking shaft unit	Sperwellesatz	Groupe arbre de blocage	Grupo árbol de bloqueo
2	VS730022710	Albero di bloccaggio D.40	D.40 locking shaft	D.40 Sperrwelle	Arbre de blocage D.40	Arbol de bloqueo D.40
3	VS710013670	Appoggio per molla	Bearing for spring	Auflage für Feder	Appui pour ressort	Apoyo para resorte
4	VS710090830	Ghiera di bloccaggio	Locking ring nut	Stoppnutmutter	Collier de blocage	Virola de bloqueado
5	VS129580660	Corpo ghiera	Ring nut body	Nutmutterkörper	Corps collier de serrage	Cuerpo abrazadera
6	VS129580670	Coperchio ghiera	Ring nut cover	Nutmutterabdeckung	Couvercle collier de serrage	Tapa abrazadera
7	VS129580680	Camma ghiera	Ring nut cam	Nutmutternocke	Came collier de serrage	Leva abrazadera
8	VS129580690	Molla ghiera	Ring nut spring	Nutmutterfeder	Ressort collier de serrage	Resorte abrazadera
9	VS129580701	Semiboccola filettata sx	Lh threaded half-bushing	Halb-Büchse gewinde l	Demi-douille filettée g	Semicasquillo fileteada iz
10	VS129580711	Semiboccola filettata dx	Rh threaded half-bushing	Halb-Büchse gewinde r	Demi-douille filettée d	Semicasquillo fileteada d
11	VS209160	VTPSEI M4x12	TSPEI M4x12 screw	Schraube TSPEI M4x12	Vis TSPEI M4x12	Tornillo TSPEI M4x12
12	VS234111	Spina cilindrica 5x32	5x32 cylindrical pin	Zylinderstecker 5x32	Goupille cylindrique 5x32	Enchufe cilíndrico 5x32
13	VS234174	Spina cilindrica 5x14	5x14 cylindrical pin	Zylinderstecker 5x14	Goupille cylindrique 5x14	Enchufe cilíndrico 5x14
14	VS237549	Rondella di spessore	Thickness washer	Beilagscheibe	Rondelle d'épaisseur	Arandela de espesor
15	VS243702	Anello 50	Ring 50	Ring 50	Anneau 50	Anillo 50
16	VS401061	OR	OR	OR	OR	OR
17	VS903120	Manopola a pressione D.8	D.8 pressure knob	Pressionknopf D.8	Poignée à pression D.8	Pomo a presión D.8
18	VS903133	Impugnatura	Handle	Handgriff	Poignée	Empuñadura
19	VS918007	Molla CMP	CMP spring	Feder CMP	Ressort CMP	Resorte CMP
20	VS710012731	Gancio	Hook	Haken	Crochage	Gancho
21	VS201040	VTE M8x30	TE M8x30 screw	Schraube TE M8x30	Vis TE M8x30	Tornillo TE M8x30
22	VS710013650	Cono per albero	Cone for shaft	Kegel für Welle	Cône pour arbre	Cono para eje
23	VSB1156000	Protezione cono	Cone guard	Kegelschutz	Protection cône	Protección cono
24	VS710412130	Tampone	Pad	Puffer	Tampon	Tampón
25	VS209226	VTPSEI M4x20	TSPEI M4x20 screw	Schraube TSPEI M4x20	Vis TSPEI M4x20	Tornillo TSPEI M4x20
26	VS299205	Tappo expander D.8	D.8 expander cup	Expander Stöpsel D.8	Bouchon expander D.8	Tapa expander D.8
27	VSB4065900	Spina cilindrica 8x45	8x45 cylindrical pin	Zylinderstecker 8x45	Goupille cylindrique 8x45	Enchufe cilíndrico 8x45

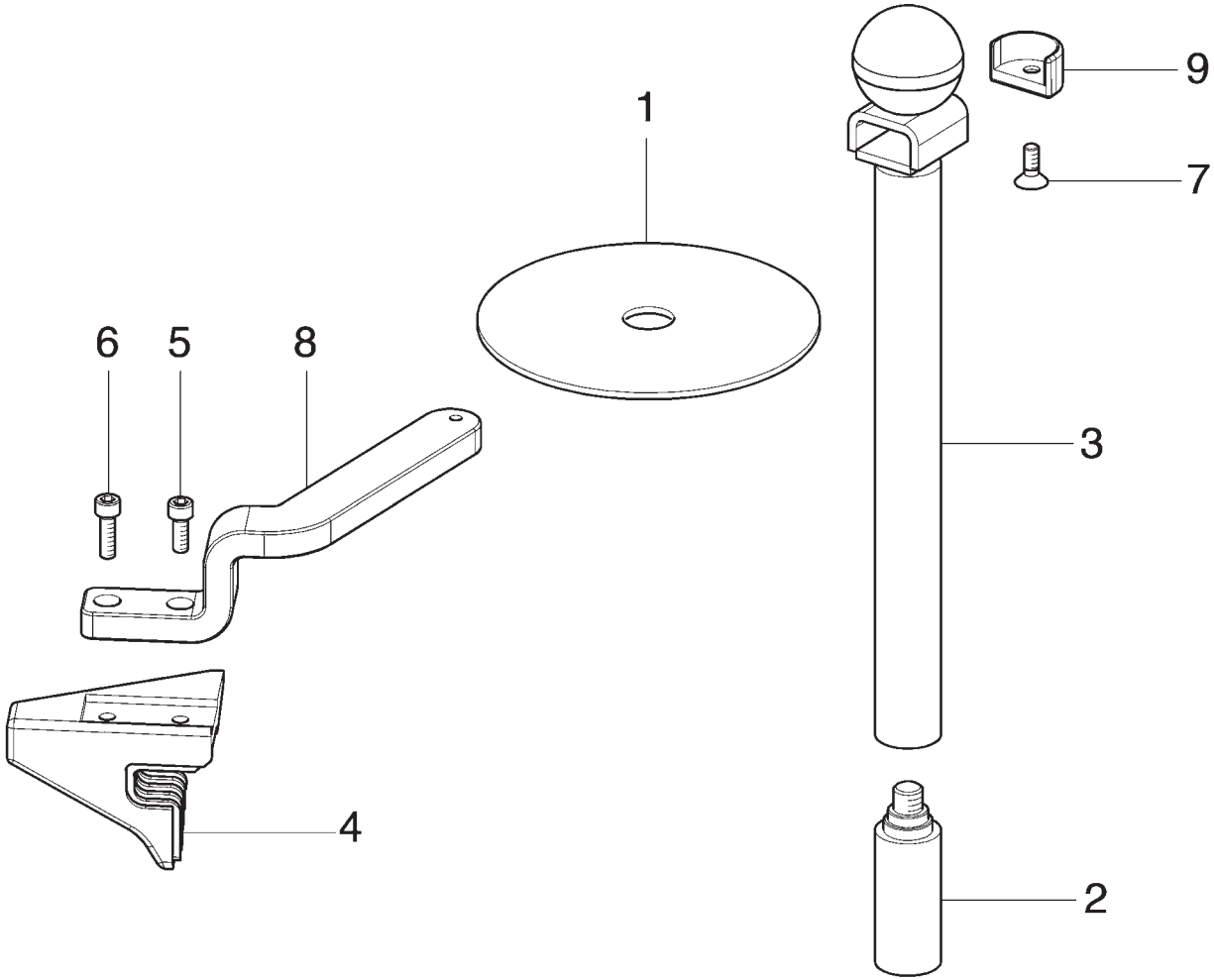

VSC1150.30	VSC1150.30I	VSC1150.30PLUS	VSC1150.30PLUSI	VSC1150.30DOUBLE	VSC1150.30DOUBLEI
•	•	•	•	•	•

PANZITTA SALES & SERVICE
72 George Avenue
Wilkes-Barre, PA 18705
570-822-6720 800-822-6720
www.panzittasales.com

LISTA DEI COMPONENTI - LIST OF COMPONENTS - TEILELISTE
LISTE DES PIECES DETACHEES - LISTA DE PIEZAS

Tavola N°22 - Rev. 1 | **VS710090730**

TRACTION TOOL

7107-R003-2_V

PANZITTA SALES & SERVICE
72 George Avenue
Wilkes-Barre, PA 18705
570-822-6720 800-822-6720
www.panzittasales.com

LISTA DEI COMPONENTI - LIST OF COMPONENTS - TEILELISTE
LISTE DES PIECES DETACHEES - LISTA DE PIEZAS

TRACTION TOOL

Tavola N°22 - Rev. 1 | **VS710090730**

VSC1150.30	VSC1150.30I	VSC1150.30PLUS	VSC1150.30PLUSI	VSC1150.30DOUBLE	VSC1150.30DOUBLEI
●	●	●	●	●	●

N°	Cod.	Descrizione	Description	Beschreibung	Description	Descripción
1	VS710112890	*Gomma protezione*	*Protection rubber*	*Schutzgummi*	*Caoutchouc protection*	*Goma protección*
2	VS710090800	*Innesto*	*Coupling*	*Kupplung*	*Attelage*	*Empalme*
3	VS710090790	*Trascinatore con pomolo*	*Entrainer with knob*	*Verlängerung mit Knauf*	*Entraînement avec pommeau*	*Jalador con pomo*
4	VSB1402200	*Cuneo*	*Wedge*	*Keil*	*Cale*	*Cuña*
5	VS206019	*VTCEI M6x16*	*TCEI M6x16 screw*	*Schraube TCEI M6x16*	*Vis TCEI M6x16*	*Tornillo TCEI M6x16*
6	VS206021	*VTCEI M6x20*	*TCEI M6x20 screw*	*Schraube TCEI M6x20*	*Vis TCEI M6x20*	*Tornillo TCEI M6x20*
7	VS209019	*VTSPEI M6x16*	*TSPEI M6x16 screw*	*Schraube TSPEI M6x16*	*Vis TSPEI M6x16*	*Tornillo TSPEI M6x16*
8	VS710013510	*Lama*	*Blade*	*Feder*	*Lame*	*Cuchilla*
9	VS710013520	*Protezione*	*Guard*	*Schutz*	*Protection*	*Protección*

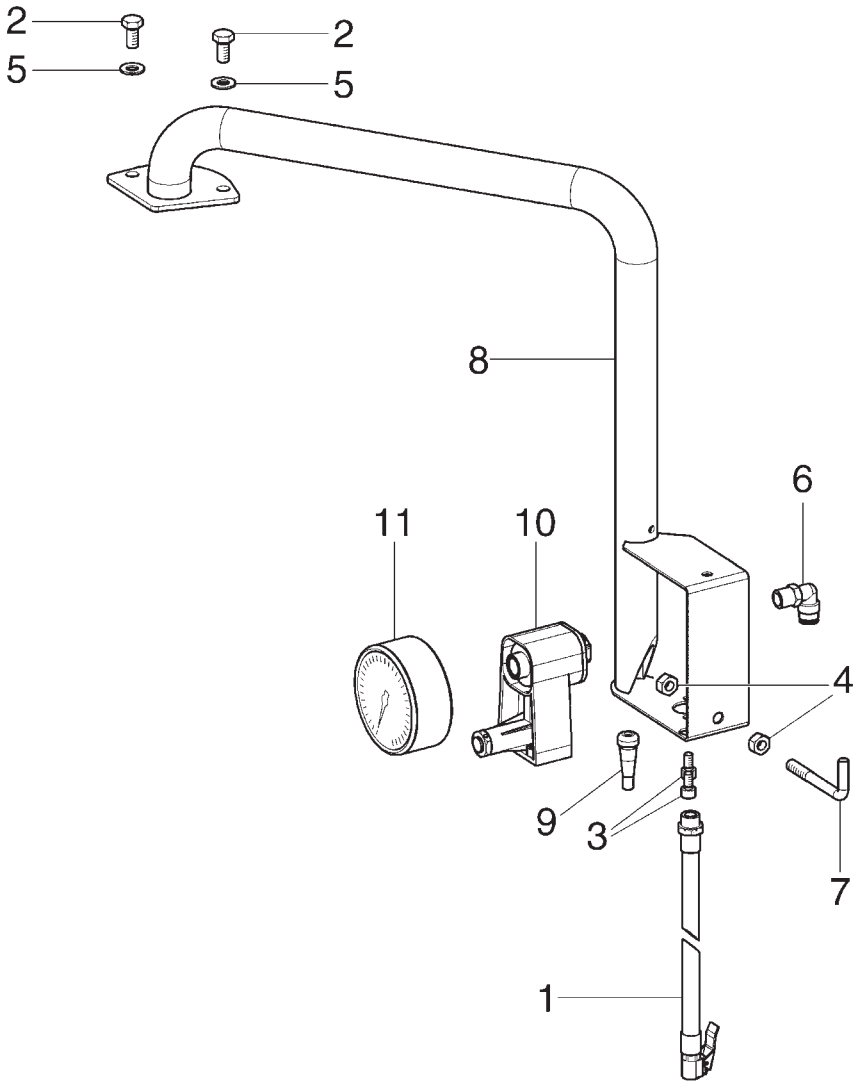

VSC1150.30	VSC1150.30I	VSC1150.30PLUS	VSC1150.30PLUSI	VSC1150.30DOUBLE	VSC1150.30DOUBLEI
•	•	•	•	•	•

PANZITTA SALES & SERVICE
72 George Avenue
Wilkes-Barre, PA 18705
570-822-6720 800-822-6720
www.panzittasales.com

LISTA DEI COMPONENTI - LIST OF COMPONENTS - TEILELISTE
LISTE DES PIECES DETACHEES - LISTA DE PIEZAS

Tavola N°23 - Rev. 0 | **VS710790190**

PRESSURE GAUGE SUPPORT UNIT

7107-R003-2_V

PANZITTA SALES & SERVICE
72 George Avenue
Wilkes-Barre, PA 18705
570-822-6720 800-822-6720
www.panzittasales.com

LISTA DEI COMPONENTI - LIST OF COMPONENTS - TEILELISTE
LISTE DES PIECES DETACHEES - LISTA DE PIEZAS

PRESSURE GAUGE SUPPORT UNIT

Tavola N°23 - Rev. 0 | **VS710790190**

VSC1150.30	VSC1150.30I	VSC1150.30PLUS	VSC1150.30PLUSI	VSC1150.30DOUBLE	VSC1150.30DOUBLEI
●	●	●	●	●	●

N°	Cod.	Descrizione	Description	Beschreibung	Description	Descripción
1	VSB1600000	*Tubo di gonfiaggio L=1500*	*Inflation pipe L=1500*	*Aufpumpschlauch L=1500*	*Tuyau de gonflage L=1500*	*Tubo de inflado L=1500*
2	VS203172	*VTE M8x16*	*TE M8x16 screw*	*Schraube TE M8x16*	*Vis TE M8x16*	*Tornillo TE M8x16*
3	VS206188	*VTCEI M6x12*	*TCEI M6x12 screw*	*Schraube TCEI M6x12*	*Vis TCEI M6x12*	*Tornillo TCEI M6x12*
4	VS224009	*Dado esagonale medio M8*	*M8 middle hexagonal nut*	*Mittlere sechswinkling Mutter M8*	*Écrou hexagonal moyen M8*	*Tuerca hexagonal medio M8*
5	VS236005	*Rondella piana*	*Flat washer*	*Ebene Scheibe*	*Rondelle plane*	*Arandela plana*
6	VS325031	*Raccordo girevole*	*Rotary union*	*Gerader Anschluss*	*Raccord pivotant*	*Enlace girable*
7	VS710013660	*Gancio*	*Hook*	*Haken*	*Crochage*	*Gancho*
8	VS710711050	*Insieme supporto manometro*	*Pressure gauge support assembly*	*Manometerträgersatz*	*Assemblage support manomètre*	*Ensamblado soporte manómetro*
9	VSB7204000	*Valvola da pneumatico*	*Tyre valve*	*Reifenventil*	*Vanne à pneumatique*	*Válvula de neumático*
10	VSB9055001	*Supporto man+scarico*	*Man+discharge support*	*Man+Ablasshalterung*	*Support man+dècharge*	*Soporte man+descarga*
11	VS909038	*Manometro D. 80*	*D. 80 pressure gauge*	*Manometer D. 80*	*Manomètre D. 80*	*Manómetro D. 80*

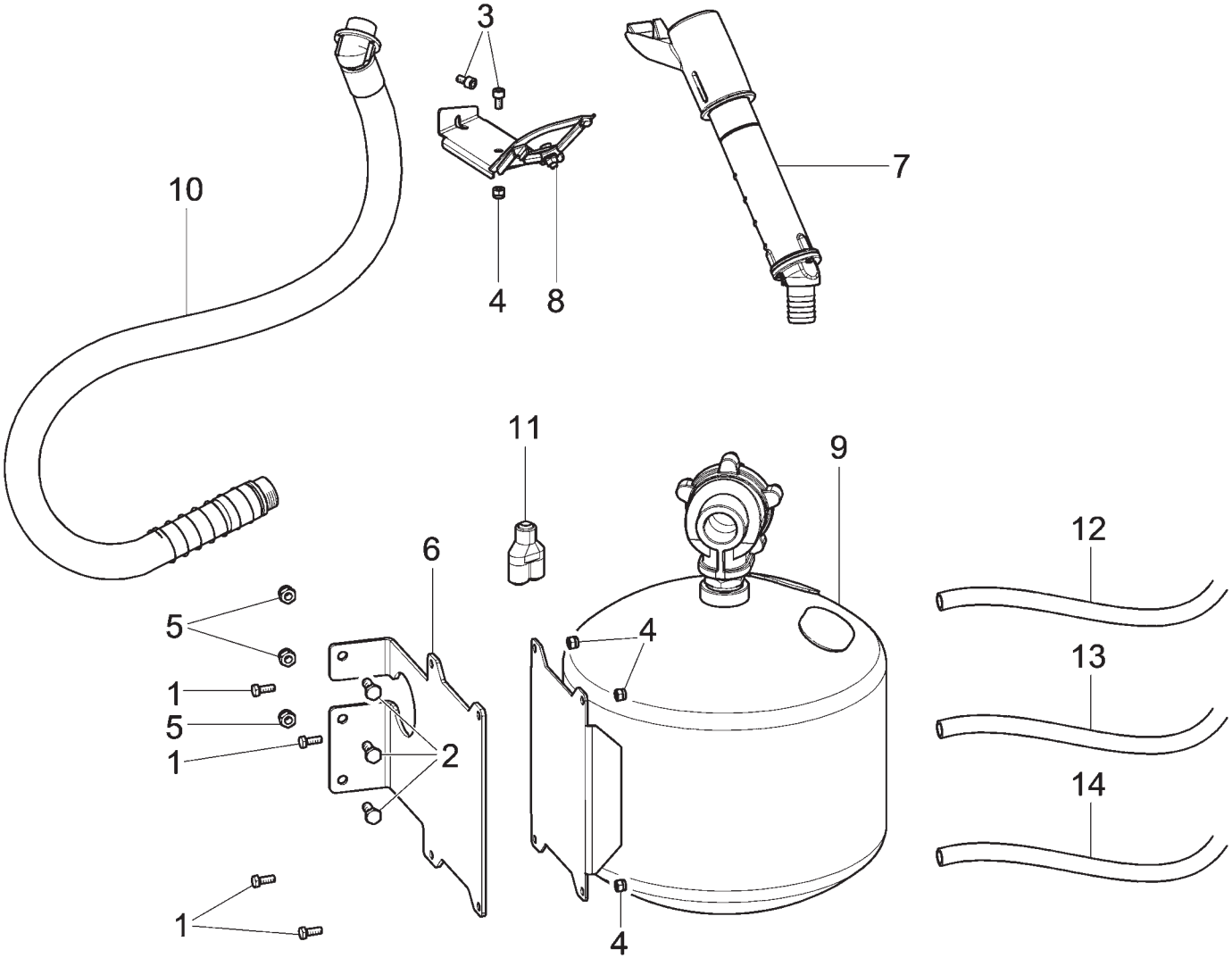

VSC1150.30	VSC1150.30I	VSC1150.30PLUS	VSC1150.30PLUSI	VSC1150.30DOUBLE	VSC1150.30DOUBLEI
	•		•		•

PANZITTA SALES & SERVICE
72 George Avenue
Wilkes-Barre, PA 18705
570-822-6720 800-822-6720
www.panzittasales.com

LISTA DEI COMPONENTI - LIST OF COMPONENTS - TEILELISTE
LISTE DES PIECES DETACHEES - LISTA DE PIEZAS

Tavola N°24 - Rev. 0 | **VS710790380**

ASME IT UNIT

PANZITTA SALES & SERVICE
72 George Avenue
Wilkes-Barre, PA 18705
570-822-6720 800-822-6720
www.panzittasales.com

LISTA DEI COMPONENTI - LIST OF COMPONENTS - TEILELISTE
LISTE DES PIECES DETACHEES - LISTA DE PIEZAS

ASME IT UNIT

Tavola N°24 - Rev. 0 | **VS710790380**

VSC1150.30	VSC1150.30I	VSC1150.30PLUS	VSC1150.30PLUSI	VSC1150.30DOUBLE	VSC1150.30DOUBLEI
	●		●		●

N°	Cod.	Descrizione	Description	Beschreibung	Description	Descripción
1	VS272019	*VTCEI M6x16*	*TCEI M6x16 screw*	*Schraube TCEI M6x16*	*Vis TCEI M6x16*	*Tornillo TCEI M6x16*
2	VS203035	*VTE M8x20*	*TE M8x20 screw*	*Schraube TE M8x20*	*Vis TE M8x20*	*Tornillo TE M8x20*
3	VS206188	*VTCEI M6x12*	*TCEI M6x12 screw*	*Schraube TCEI M6x12*	*Vis TCEI M6x12*	*Tornillo TCEI M6x12*
4	VS228010	*Dado autobloccante M6*	*M6 autoblock nut*	*Autoblock Mutter M6*	*Écrou autoblock M6*	*Tuerca autoblock M6*
5	VS228011	*Dado autobloccante M8*	*M8 self-locking nut*	*Mutter selbstsperrend M8*	*Écrou auto-bloquant M8*	*Tuerca autoblocante M8*
6	VS710711100	*Staffa serbatoio*	*Tank bracket*	*Behälterbügel*	*Bride reservoir*	*Brida tanque*
7	VS770090000	*Assieme gonfiatore*	*Inflation device assembly*	*Füllvorrichtungensemble*	*Assemblage gonfleur*	*Ensamblado dispositivo de inflado*
8	VS790090120	*Serbatoio CEE*	*CEE reservoir*	*Tank CEE*	*Réservoir CEE*	*Tanque CEE*
9	VS790090150	*Serbatoio ASME*	*ASME tank*	*Tank ASME*	*Réservoir ASME*	*Tanque ASME*
10	VS790090060	*Tubo cianfrinato*	*Pipe*	*Schlauch*	*Tuyau*	*Tubo*
11	VS325181	*Raccordo a V8*	*V8 union*	*V-Verbindung 8*	*Raccord à V8*	*Enlace a V8*
12	VS317009	*Tubo rilsan 8x6 blu L=1200*	*8x6 blue rilsan pipe L=1200*	*Rilsan Schlauch 8x6 blau L=1200*	*Tuyau rilsan 8x6 bleu L=1200*	*Tubo rilsan 8x6 azul L=1200*
13	VS317009	*Tubo rilsan 8x6 blu L=390*	*8x6 blue rilsan pipe L=390*	*Rilsan Schlauch 8x6 blau L=390*	*Tuyau rilsan 8x6 bleu L=390*	*Tubo rilsan 8x6 azul L=390*
14	VS317009	*Tubo rilsan 8x6 blu L=780*	*8x6 blue rilsan pipe L=780*	*Rilsan Schlauch 8x6 blau L=780*	*Tuyau rilsan 8x6 bleu L=780*	*Tubo rilsan 8x6 azul L=780*

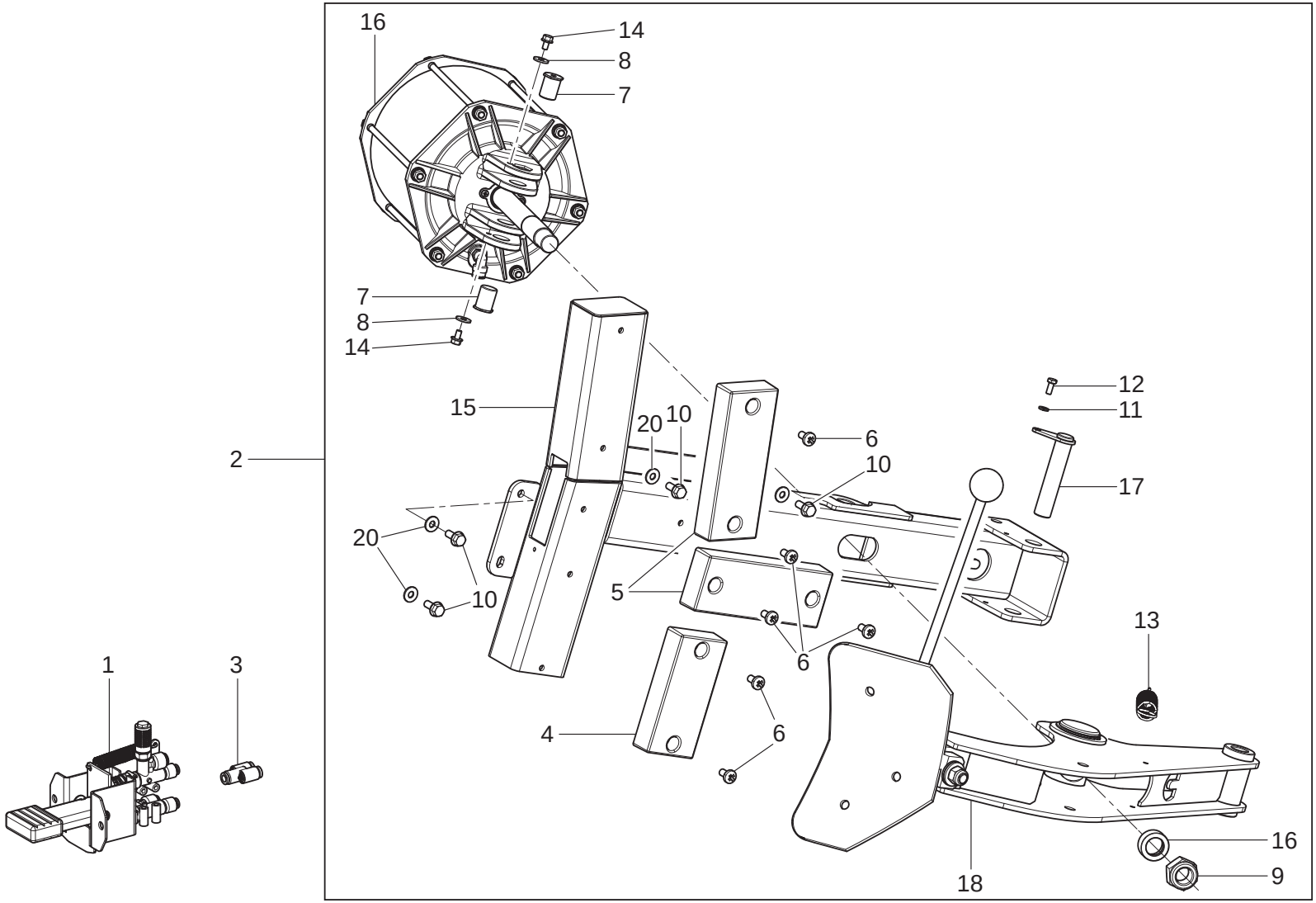

VSC1150.30	VSC1150.30I	VSC1150.30PLUS	VSC1150.30PLUSI	VSC1150.30DOUBLE	VSC1150.30DOUBLEI
		●	●	●	●

PANZITTA SALES & SERVICE
72 George Avenue
Wilkes-Barre, PA 18705
570-822-6720 800-822-6720
www.panzittasales.com

LISTA DEI COMPONENTI - LIST OF COMPONENTS - TEILELISTE
LISTE DES PIECES DETACHEES - LISTA DE PIEZAS

Tavola N°25 - Rev. 2 | **VS710790300**

BEAD BREAKER UNIT ON GROUND LEVEL

7107-R003-2_V

PANZITTA SALES & SERVICE
72 George Avenue
Wilkes-Barre, PA 18705
570-822-6720 800-822-6720
www.panzittasales.com

LISTA DEI COMPONENTI - LIST OF COMPONENTS - TEILELISTE
LISTE DES PIECES DETACHEES - LISTA DE PIEZAS

BEAD BREAKER UNIT ON GROUND LEVEL

Tavola N°25 - Rev. 2 | **VS710790300**

VSC1150.30	VSC1150.30I	VSC1150.30PLUS	VSC1150.30PLUSI	VSC1150.30DOUBLE	VSC1150.30DOUBLEI
		●	●	●	●

N°	Cod.	Descrizione	Description	Beschreibung	Description	Descripción
1	VS710690280	Gruppo pedale stallonatore	Bead breaking pedal unit	Abdrücksatz Pedal	Groupe pédal décolle talon	Grupo pedal destalonador
2	VS710690360	Gruppo telaio stallonatore	Bead breaking frame unit	Abdrückerrahmensatz	Groupe chassis décolle-talons	Grupo estructura destalonador
3	VS325181	Raccordo a V8	V8 union	V-Verbindung 8	Raccord à V8	Enlace a V8
4	VSB0381000	Appoggio in gomma	Rubber bearing	Gummiauflage	Appui en caoutchouc	Apoyo de goma
5	VSB0659000	Appoggio in gomma L.	L.rubber bearing	L. Gummiauflage	Appui en caoutchouc L.	Apoyo de goma L.
6	VS270172	VTCBM8x16	TCB M8x16 screw	Schraube TCB M8x16	Vis TCB M8x16	Tornillo TCB M8x16
7	VS140920361	Perno fulcro cilindro	Cylinder fulcrum pin	Zapfenfulcrum Zylinder	Pivot point d'appui cylindre	Perno fulcro cilindro
8	VS237011	Rondella piana ø6x18	ø6x18 flat washer	Ebene Scheibe ø6x18	Rondelle plane ø6x18	Arandela plana ø6x18
9	VS228041	Dado autobl. M22x1,5	M22x1,5 self-locking nut	Mutter selbstsperrend M22x1,5	Écrou auto-bloquant M22x1,5	Tuerca autoblocante M22x1,5
10	VS203038	VTE M8x25	TE M8x25 screw	Schraube TE M8x25	Vis TE M8x25	Tornillo TE M8x25
11	VS238004	Rondella elastica 6,4	6,4 elastic washer	Elastikscheibe 6,4	Rondelle elastique 6,4	Arandela elástica 6,4
12	VS203015	VTE M6x14	TE M6x14 screw	Schraube TE M6x14	Vis TE M6x14	Tornillo TE M6x14
13	VS950020060	Molla richiamo braccio	Arm return spring	Armfeder	Ressort retourne bras	Resorte vuelta brazo
14	VS269201	VTE autoforante M6X10	M6X10 TE self-drilling screw	Schraube selbst-loch TE M6X10	Vis TE auto-forant M6X10	Tornillo TE auto-horada M6X10
15	VS710212030	Telaio stallonatore	Bead breaking frame	Abdrückerrahmen	Châssis décolle-talons	Estructura destalonador
16	VS710290370	Cilindro stallonatore fulcrato	Bead breaking fulcrum-type cylinder	Abdrückzylinder Fulcrum	Cylindre décolle-talon point d'appui	Cilindro destalonador fulcro
17	VS140320430	Perno fulcro braccio	Arm fulcrum pin	Zapfenfulcrum Arm	Pivot point d'appui bras	Perno fulcro brazo
18	VS710690620	Ins. Braccio stall	Bead-breaker arm insert	Abdrückersatz Arm	Renfort bras décolle-talons	Inserción brazo destalonador
19	VS790012770	Distanziale	Spacer	Abstandsstück	Entretoise	Distanciador
20	VS236006	Rondella piana 8,4	8,4 flat washer	Ebene Scheibe 8,4	Ebene Scheibe 8,4	Arandela plana 8,4

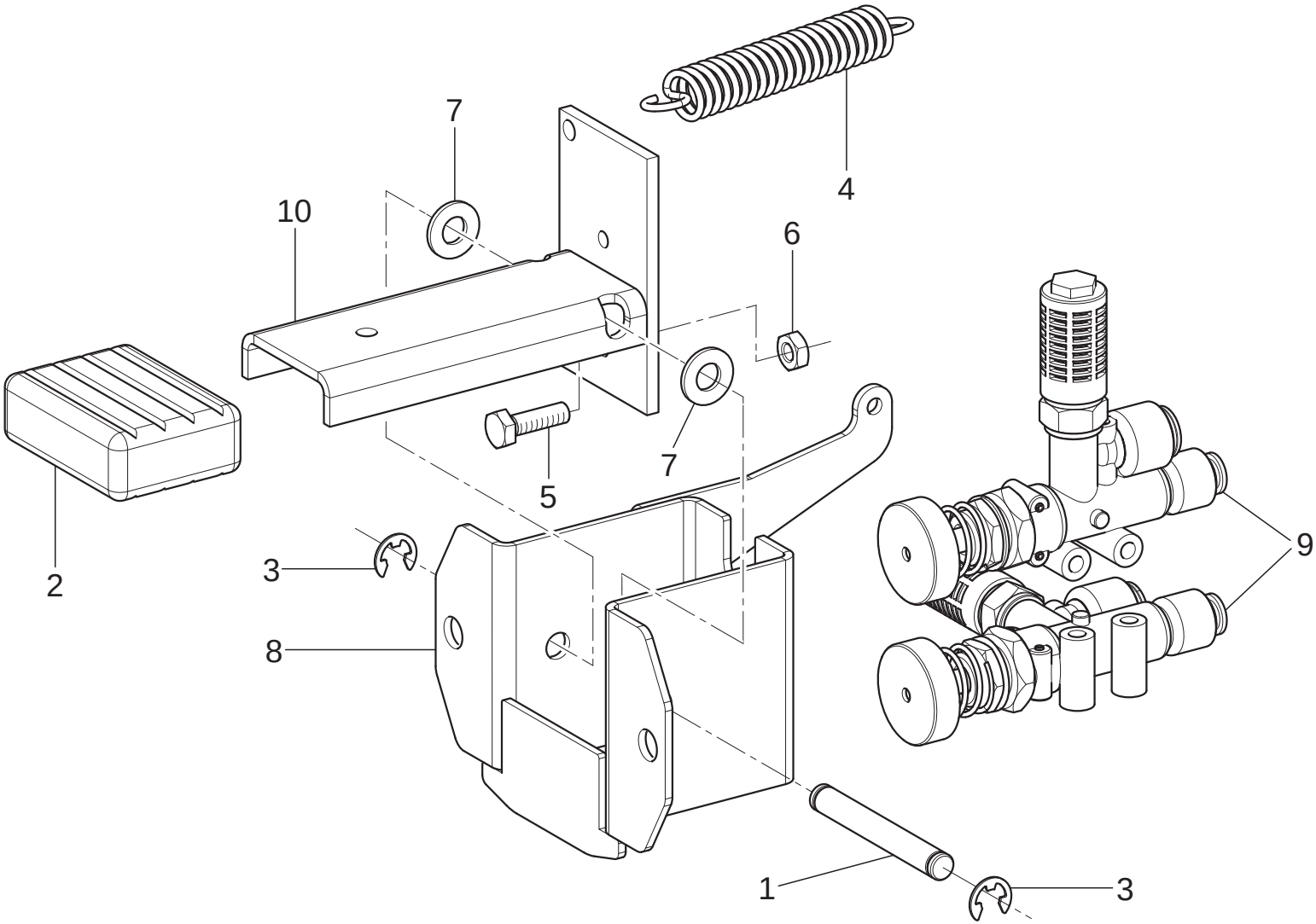

VSC1150.30	VSC1150.30I	VSC1150.30PLUS	VSC1150.30PLUSI	VSC1150.30DOUBLE	VSC1150.30DOUBLEI
		•	•	•	•

PANZITTA SALES & SERVICE
72 George Avenue
Wilkes-Barre, PA 18705
570-822-6720 800-822-6720
www.panzittasales.com

LISTA DEI COMPONENTI - LIST OF COMPONENTS - TEILELISTE
LISTE DES PIECES DETACHEES - LISTA DE PIEZAS

Tavola N°26 - Rev. 0 | **VS710690280**

BEAD BREAKING PEDAL UNIT

7107-R003-2_V

PANZITTA SALES & SERVICE
72 George Avenue
Wilkes-Barre, PA 18705
570-822-6720 800-822-6720
www.panzittasales.com

LISTA DEI COMPONENTI - LIST OF COMPONENTS - TEILELISTE
LISTE DES PIECES DETACHEES - LISTA DE PIEZAS

BEAD BREAKING PEDAL UNIT

Tavola N°26 - Rev. 0 | **VS710690280**

VSC1150.30	VSC1150.30I	VSC1150.30PLUS	VSC1150.30PLUSI	VSC1150.30DOUBLE	VSC1150.30DOUBLEI
		●	●	●	●

N°	Cod.	Descrizione	Description	Beschreibung	Description	Descripción
1	VS710612040	*Perno pedaliera*	*Pedalboard pin*	*Pedalleistenzapfen*	*Pivot pédales de direction*	*Perno pedalera*
2	VSB0173000	*Tappo protezione pedale*	*Pedal protection plug*	*Pedalschutzstöpsel*	*Bouchon protection pédale*	*Tapa protección pedal*
3	VS299051	*Anello di fermo D.7*	*D.7 stopper ring*	*Halterung Ring D.7*	*Anneau d'arrêt D.7*	*Anillo de traba D.7*
4	VS918016	*Molla TRZ*	*TRZ spring*	*Feder TRZ*	*Ressort TRZ*	*Resorte TRZ*
5	VS203021	*VTE M6x20*	*TE M6x20 screw*	*Schraube TE M6x20*	*Vis TE M6x20*	*Tornillo TE M6x20*
6	VS226007	*Dado basso M6*	*M6 low nut*	*Untere Mutter M6*	*Écrou bas M6*	*Tuerca baja M6*
7	VS236005	*Rondella piana 8,4*	*Flat washer*	*Ebene Scheibe*	*Rondelle plane*	*Arandela plana*
8	VS710612150	*Corpo pedaliera*	*Pedalboard body*	*Pedalleistekörper*	*Corps pédales de direction*	*Cuerpo pedalera*
9	VS710290700	*Valvola 3-2 piattello D.30*	*3-2 valve D.30 pan*	*Ventil 3-2 Scheibe D.30*	*Vanne 3-2 plateau D.30*	*Válvula 3-2 platillo D.30*
10	VS710210780	*Pedale singolo*	*Single pedal*	*Einzelpedal*	*Pédale unique*	*Pedal simple*

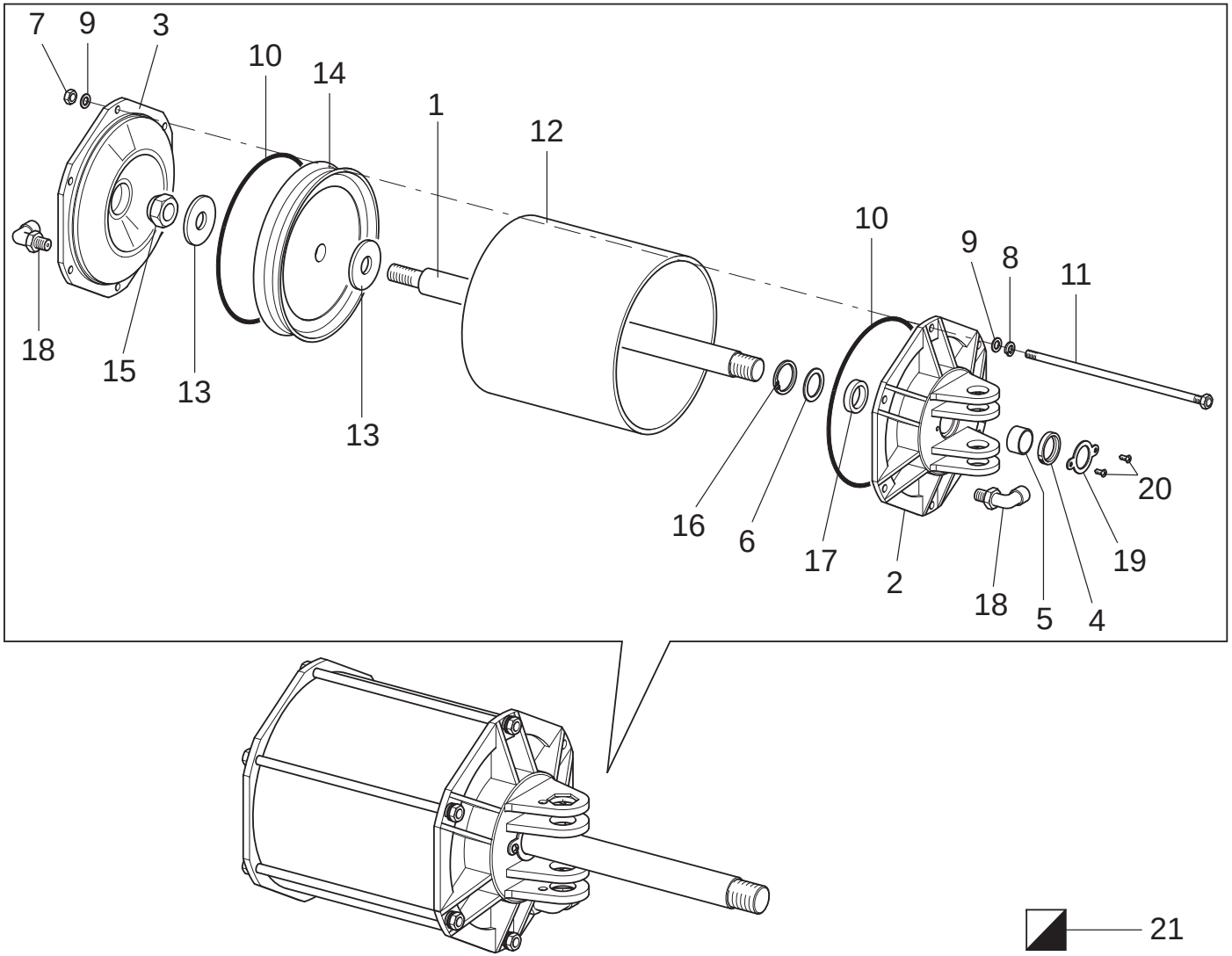

VSC1150.30	VSC1150.30I	VSC1150.30PLUS	VSC1150.30PLUSI	VSC1150.30DOUBLE	VSC1150.30DOUBLEI
		•	•	•	•

PANZITTA SALES & SERVICE
72 George Avenue
Wilkes-Barre, PA 18705
570-822-6720 800-822-6720
www.panzittasales.com

LISTA DEI COMPONENTI - LIST OF COMPONENTS - TEILELISTE
LISTE DES PIECES DETACHEES - LISTA DE PIEZAS

Tavola N°27 - Rev. 0 | **VS710290370**

BEAD BREAKING FULCRUM-TYPE CYLINDER

PANZITTA SALES & SERVICE
72 George Avenue
Wilkes-Barre, PA 18705
570-822-6720 800-822-6720
www.panzittasales.com

LISTA DEI COMPONENTI - LIST OF COMPONENTS - TEILELISTE
LISTE DES PIECES DETACHEES - LISTA DE PIEZAS

BEAD BREAKING FULCRUM-TYPE CYLINDER

Tavola N°27 - Rev. 0 | **VS710290370**

VSC1150.30	VSC1150.30I	VSC1150.30PLUS	VSC1150.30PLUSI	VSC1150.30DOUBLE	VSC1150.30DOUBLEI
		●	●	●	●

N°	Cod.	Descrizione	Description	Beschreibung	Description	Descripción
1	VS710210120	Stelo cilindro stallonatore	Bead breaker cylinder rod	Stange Abdrückerhalterungzylinder	Tige cylindre décolle-talons	Vástago cilindro destalonador
2	VS140920541	Flangia anteriore per stelo	Front flange for rod	Vordere Flansch für Stab	Bride antérieur pour tige	Brida anterior para asta
3	VS140920550	Flangia posteriore	Rear flange	Hinteres Flansch	Bride postérieur	Brida posterior
4	VS408425	Raschiatore	Scraper	Abschaber	Ráclette	Raspador
5	VS630036	Boccola autolubrificante	Self-lubricating bushing	Selbstschmierfähig BüchseSelbüchse	Douille auto-lubrifiant	Casquillo autolubricante
6	VS140926220	Rondella guarnizione	Gasket washer	Dichtungscheibe	Rondelle joint	Arandela guarnición
7	VS222009	Dado esagonale M8	M8 high nut	Obere Mutter M8	Écrou haut M8	Tuerca alta M8
8	VS238006	Rondella elastica 8,4	8,4 elastic washer	Elastikscheibe 8,4	Rondelle elastique 8,4	Arandela elástica 8,4
9	VS236006	Rondella piana 8,4	8,4 flat washer	Ebene Scheibe 8,4	Rondelle plane 8,4	Arandela plana 8,4
10	VS401196	OR D.183,74x3,53	O-ring 183,74x3,53	O-Ring 183,74x3,53	O-ring 183,74x3,53	O-ring 183,74x3,53
11	VS140920062	Tirante M8	M8 tie rod	Spannstange M8	Tirant M8	Jalador M8
12	VS140920041	Canna cilindro stallonatore	Cylinder bead-breaker barrel	Zylinderabdrückerrohr	Gaine cylindre décolle-talons	Caño cilindro destalonador
13	VS140920380	Rondella D.54x18x4	D.54x18x4 washer	Beilagscheibe D.54x18x4	Rondelle D.54x18x4	Arandela D.54x18x4
14	VS140920140	Guarnizione stallonatore	Bead-breaker gasket	Dichtung Abdrücker	Joint décolle-talons	Junta destalonador
15	VS228020	Dado autobloccante M18	18x1,5 selflocking nut	Mutter selbstsperrend 18x1,5	Écrou auto-bloquant 18x1,5	Tuerca autoblocante 18x1,5
16	VS299156	Seeger per foro	Seeger for hole	Seeger für loch	Anneau de retenue pour trou	Seeger para hoyo
17	VS403123	Guarnizione	Gasket	Dichtung	Joint	Junta
18	VS325107	Raccordo girevole L	L rotary union	Gerader Anschluss L	Raccord pivotant L	Enlace girable L
19	VS140912061	Piastrina	Plate	Plätchen	Plaquette	Placa
20	VS220063	VTCB M4,2x13	TCB M4,2x13 screw	Schraube M4,2x13	Vis M4,2x13	Tornillo M4,2x13
21	VSGU4740	Kit guarnizione cilindro	Cylinder gasket kit	Zylinderdichtungenset	Kit joint cylindre	Kit junta cilindro

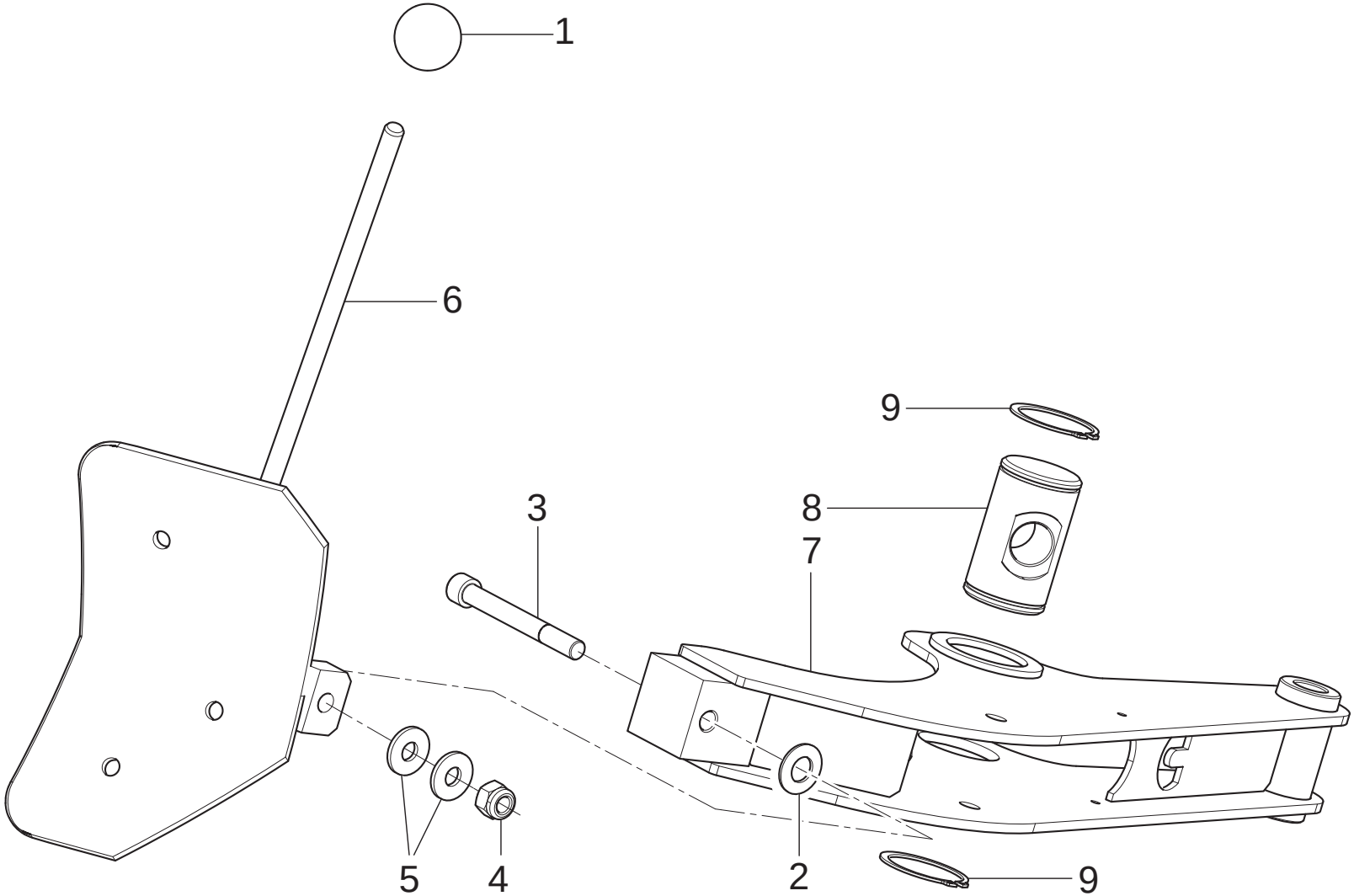

VSC1150.30	VSC1150.30I	VSC1150.30PLUS	VSC1150.30PLUSI	VSC1150.30DOUBLE	VSC1150.30DOUBLEI
		•	•	•	•

PANZITTA SALES & SERVICE
72 George Avenue
Wilkes-Barre, PA 18705
570-822-6720 800-822-6720
www.panzittasales.com

LISTA DEI COMPONENTI - LIST OF COMPONENTS - TEILELISTE
LISTE DES PIECES DETACHEES - LISTA DE PIEZAS

Tavola N°28 - Rev. 1 | **VS710690620**

BEAD BREAKER ARM UNIT

7107-R003-2_V

PANZITTA SALES & SERVICE
72 George Avenue
Wilkes-Barre, PA 18705
570-822-6720 800-822-6720
www.panzittasales.com

LISTA DEI COMPONENTI - LIST OF COMPONENTS - TEILELISTE
LISTE DES PIECES DETACHEES - LISTA DE PIEZAS

BEAD BREAKER ARM UNIT

Tavola N°28 - Rev. 1 | **VS710690620**

VSC1150.30	VSC1150.30I	VSC1150.30PLUS	VSC1150.30PLUSI	VSC1150.30DOUBLE	VSC1150.30DOUBLEI
		●	●	●	●

N°	Cod.	Descrizione	Description	Beschreibung	Description	Descripción
1	VS903090	*Pomolo sferico D. 40*	*D. 40 ball knob*	*Knauf D. 40*	*Pommeau sphérique D. 40*	*Pomo esferico D. 40*
2	VS253017	*Molla tazza*	*Belleville washer*	*Becherfeder*	*Ressort godet*	*Resorte*
3	VS140925901	*Vite per braccio stallonatore*	*Screw for bead-breaker arm*	*Schraube für Abdrückerarm*	*Vis pour bras décolle-talon*	*Tornillo para brazo destalonador*
4	VS228006	*Dado autobloccante M12*	*M12 self-locking nut*	*Mutter selbstsperrend M12*	*Écrou auto-bloquant M12*	*Tuerca autoblocante M12*
5	VS237069	*Rondella piana*	*Flat washer*	*Ebene Scheibe*	*Rondelle plane*	*Arandela plana*
6	VS710613020	*Paletta*	*Vane*	*Palette*	*Palette*	*Paleta*
7	VS730011591	*Braccio stallonatore*	*Bead breaker arm*	*Abdrückarm*	*Bras décolle-talons*	*Brazo destalonador*
8	VS730019810	*Perno fulcro*	*Fulcrum pin*	*Zapfenfulcrum*	*Pivot point d'appui*	*Perno fulcro*
9	VS243022	*Seeger esterno*	*External seeger*	*Seeger aussen*	*Anneau de retenue extérieur*	*Seeger aussen*

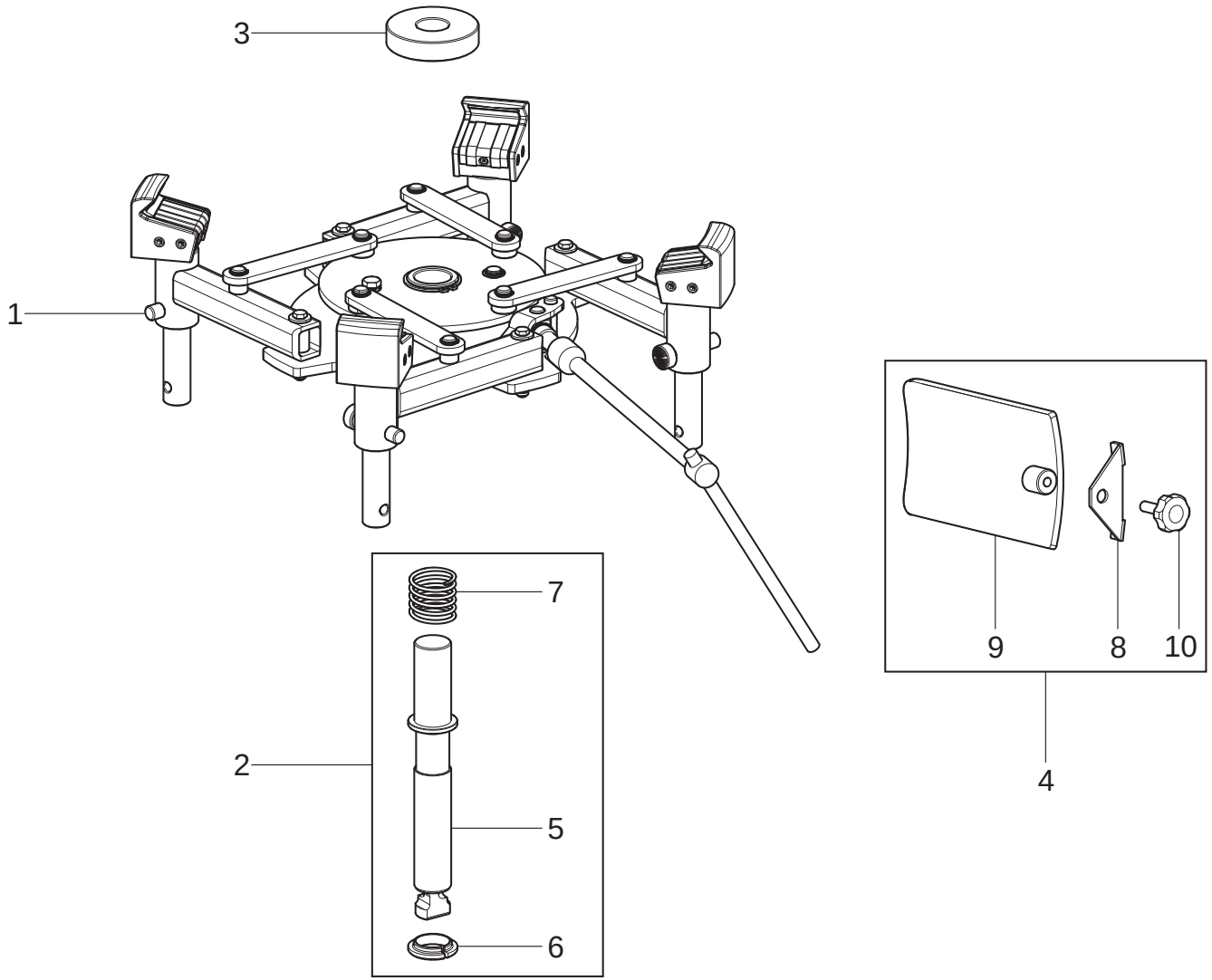

VSC1150.30	VSC1150.30I	VSC1150.30PLUS	VSC1150.30PLUSI	VSC1150.30DOUBLE	VSC1150.30DOUBLEI
				•	•

PANZITTA SALES & SERVICE
72 George Avenue
Wilkes-Barre, PA 18705
570-822-6720 800-822-6720
www.panzittasales.com

LISTA DEI COMPONENTI - LIST OF COMPONENTS - TEILELISTE
LISTE DES PIECES DETACHEES - LISTA DE PIEZAS

Tavola N°29 - Rev. 0 | **VSG1000A125**

LOCKING DEVICE FOR MOTORBIKE WHEELS

PANZITTA SALES & SERVICE
72 George Avenue
Wilkes-Barre, PA 18705
570-822-6720 800-822-6720
www.panzittasales.com

LISTA DEI COMPONENTI - LIST OF COMPONENTS - TEILELISTE
LISTE DES PIECES DETACHEES - LISTA DE PIEZAS

LOCKING DEVICE FOR MOTORBIKE WHEELS

Tavola N°29 - Rev. 0 | **VSG1000A125**

VSC1150.30	VSC1150.30I	VSC1150.30PLUS	VSC1150.30PLUSI	VSC1150.30DOUBLE	VSC1150.30DOUBLEI
				●	●

N°	Cod.	Descrizione	Description	Beschreibung	Description	Descripción
1	VS770190411	*Gruppo autocentrante moto*	*Motorcycle selfcentering chuck*	*Motorrad selbstzentrierendersatz*	*Groupe autocentreur moto*	*Grupo autocentrante moto*
2	VS770190380	*Gruppo albero di bloccaggio*	*Locking shaft unit*	*Sperwellesatz*	*Groupe arbre de blocage*	*Grupo árbol de bloqueo*
3	VS770111870	*Ghiera*	*Ring nut*	*Nutmutter*	*Collier*	*Virola*
4	VSB2082000	*Paletta con fermo*	*Vane with stopper*	*Palette mit Sperre*	*Palette avec arrêt*	*Paleta con traba*
5	VS770111860	*Albero di bloccaggio*	*Locking shaft*	*Sperrwelle*	*Arbre de blocage*	*Arbol de bloqueo*
6	VS710013670	*Appoggio per molla*	*Bearing for spring*	*Auflage für Feder*	*Appui pour ressort*	*Apoyo para resorte*
7	VS918007	*Molla CMP*	*CMP spring*	*Feder CMP*	*Ressort CMP*	*Resorte CMP*
8	VSB2069000	*Staffa paletta*	*Vane bracket*	*Bügel Palette*	*Bride palette*	*Brida paleta*
9	VSB2072000	*Paletta*	*Vane*	*Palette*	*Palette*	*Paleta*
10	VSB2081000	*Volantino*	*Handwheel*	*Handrad*	*Volant à main*	*Volantín*

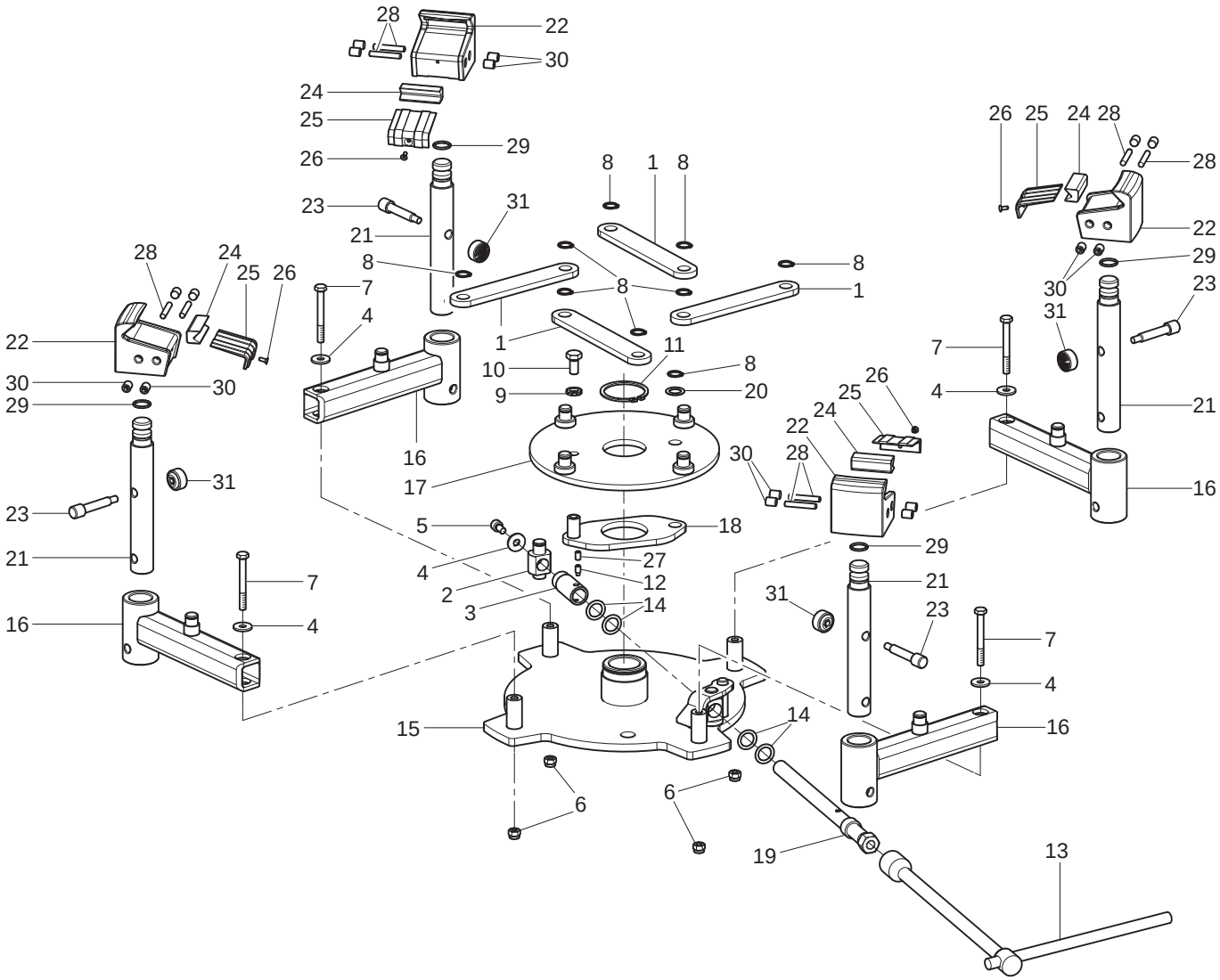

VSC1150.30	VSC1150.30I	VSC1150.30PLUS	VSC1150.30PLUSI	VSC1150.30DOUBLE	VSC1150.30DOUBLEI
				•	•

PANZITTA SALES & SERVICE
72 George Avenue
Wilkes-Barre, PA 18705
570-822-6720 800-822-6720
www.panzittasales.com

LISTA DEI COMPONENTI - LIST OF COMPONENTS - TEILELISTE
LISTE DES PIECES DETACHEES - LISTA DE PIEZAS

Tavola N°30 - Rev. 0 | **VS770190411**

MOTORCYCLE SELFCENTERING CHUCK

PANZITTA SALES & SERVICE
72 George Avenue
Wilkes-Barre, PA 18705
570-822-6720 800-822-6720
www.panzittasales.com

LISTA DEI COMPONENTI - LIST OF COMPONENTS - TEILELISTE
LISTE DES PIECES DETACHEES - LISTA DE PIEZAS

MOTORCYCLE SELFCENTERING CHUCK

Tavola N°30 - Rev. 0 | **VS770190411**

VSC1150.30	VSC1150.30I	VSC1150.30PLUS	VSC1150.30PLUSI	VSC1150.30DOUBLE	VSC1150.30DOUBLEI
				●	●

N°	Cod.	Descrizione	Description	Beschreibung	Description	Descripción
1	VS770112510	*Biella*	*Connecting rod*	*Pleuelstange*	*Bielle*	*Biela*
2	VS770112520	*Perno filettato*	*Threaded pin*	*Gewindezapfen*	*Pivot fileté*	*Perno fileteado*
3	VS770112530	*Boccola*	*Bushing*	*Büchse*	*Douille*	*Casquillo*
4	VS237011	*Rondella piana ø6x18*	*ø6x18 flat washer*	*Ebene Scheibe ø6x18*	*Rondelle plane ø6x18*	*Arandela plana ø6x18*
5	VS206188	*VTCEI M6x12*	*TCEI M6x12 screw*	*Schraube TCEI M6x12*	*Vis TCEI M6x12*	*Tornillo TCEI M6x12*
6	VS228010	*Dado autobloccante M6*	*M6 autoblock nut*	*Autoblock Mutter M6*	*Écrou autoblock M6*	*Tuerca autoblock M6*
7	VS201098	*VTE M6x55*	*TE M6x55 screw*	*Schraube TE M6x55*	*Vis TE M6x55*	*Tornillo TE M6x55*
8	VS243005	*Seeger est.12*	*Ring 12*	*Ring 12*	*Anneau 12*	*Anillo 12*
9	VS239023	*Rondella dentata 8,4*	*8,4 toothed washer*	*Zahnrosette 8,4*	*Rondelle dentée 8,4*	*Roseta dentada 8,4*
10	VS203172	*VTE M8x16*	*TE M8x16 screw*	*Schraube TE M8x16*	*Vis TE M8x16*	*Tornillo TE M8x16*
11	VS243052	*Seeger esterno 42*	*External seeger 42*	*Seeger aussen 42*	*Anneau de retenue extérieur 42*	*Seeger esterno 42*
12	VS211229	*VSTEI M5x10*	*STEI M5x10 screw*	*Schraube STEI M5x10*	*Vis STEI M5x10*	*Tornillo STEI M5x10*
13	VS770112360	*Chiave a T*	*T-wrench*	*T-förmiger Schlüssel*	*Clé en T*	*Llave en T*
14	VS237546	*Rondella di spessore*	*Thickness washer*	*Beilagscheibe*	*Rondelle d'épaisseur*	*Arandela de espesor*
15	VS770112061	*Insieme flangia inferiore*	*Lower flange assembly*	*Untere Flanschsatz*	*Assemblage bride inférieure*	*Conjunto brida inferior*
16	VS770112130	*Insieme braccio*	*Arm assembly*	*Armsatz*	*Ensamblage bras*	*Ensamblado brazo*
17	VS770112151	*Insieme disco sincronizzatore*	*Synchronizing disc assembly*	*Synchronplattesatz*	*Assemblage disc synchroniseur*	*Conjunto disco sincronizador*
18	VS770112241	*Insieme fulcro inferiore*	*Lower fulcrum assembly*	*Unterdrehpunktsatz*	*Assemblage point d'appui inférieur*	*Conjunto fulcro inferior*
19	VS770112350	*Insieme tirante*	*Tie rod assembly*	*Zugstangesatz*	*Assemblage tirant*	*Conjunto tirante*
20	VS237505	*Rondella*	*Washer*	*Scheibe*	*Rondelle*	*Arandela*
21	VS770112440	*Prolunga griffa*	*Jaw extension*	*Klobenverlängerung*	*Rallonge griffe*	*Alargador gancho*
22	VS770112480	*Griffa moto*	*Motorcycle jaw*	*Motorradklaue*	*Griffe moto*	*Gancho moto*
23	VS770112470	*Perno per prolunga*	*Pin for extension*	*Zapfen für Verlängerung*	*Pivot pour rallonge*	*Perno para alargador*
24	VSB2917000	*Gomma per griffa*	*Rubber for jaw*	*Gummi für Klaue*	*Caoutchouc pour griffe*	*Goma para gancho*
25	VSB2916000	*Protezione griffa*	*Jaw guard*	*Klobenschutz*	*Protection griffe*	*Protección gancho*
26	VS209233	*VTPSEI M3x8*	*TSPEI M3x8 screw*	*Schraube TSPEI M3x8*	*Vis TSPEI M3x8*	*Tornillo TSPEI M3x8*
27	VS210206	*VSTEI piana M5x8*	*M5x8 STEI flat screw*	*Schraube STEI M5x8*	*Vis STEI plane M5x8*	*Tornillo STEI plana M5x8*
28	VS234111	*Spina cilindrica 5x32*	*5x32 cylindrical pin*	*Zylinderstecker 5x32*	*Goupille cylindrique 5x32*	*Enchufe cilíndrico 5x32*
29	VS401243	*OR*	*OR*	*OR*	*OR*	*OR*
30	VS210028	*VSTEI p. piana M8x10*	*M8x10 STEI flat point screw*	*Schraube STEI M8x10*	*Vis STEI à pointe plane M8x10*	*Tornillo STEI plana M8x10*
31	VS903149	*Pomello*	*Knob*	*Handgriff*	*Poignée*	*Pomo*