MONDOLFO FERRO
AUTOMOTIVE SERVICE EQUIPMENT

Manuale d'uso
Operator's manual
Manuel d'utilisation
Betriebsanleitung
Manual de uso

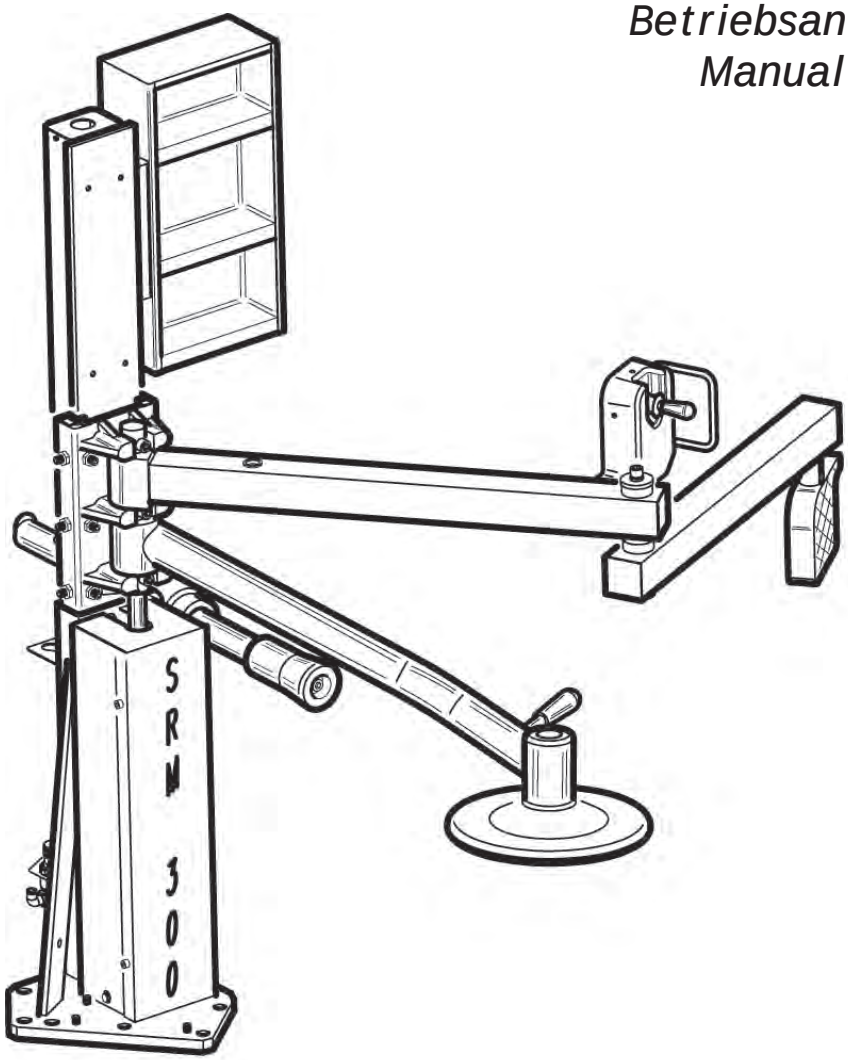

PANZITTA SALES & SERVICE
72 George Avenue
Wilkes-Barre, PA 18705
570-822-6720 800-822-6720
www.panzittasales.com

HELPER SRM 300

Code 4-115150A - 03/2013

HELPER SRM 300	TAB.A	11 / 11

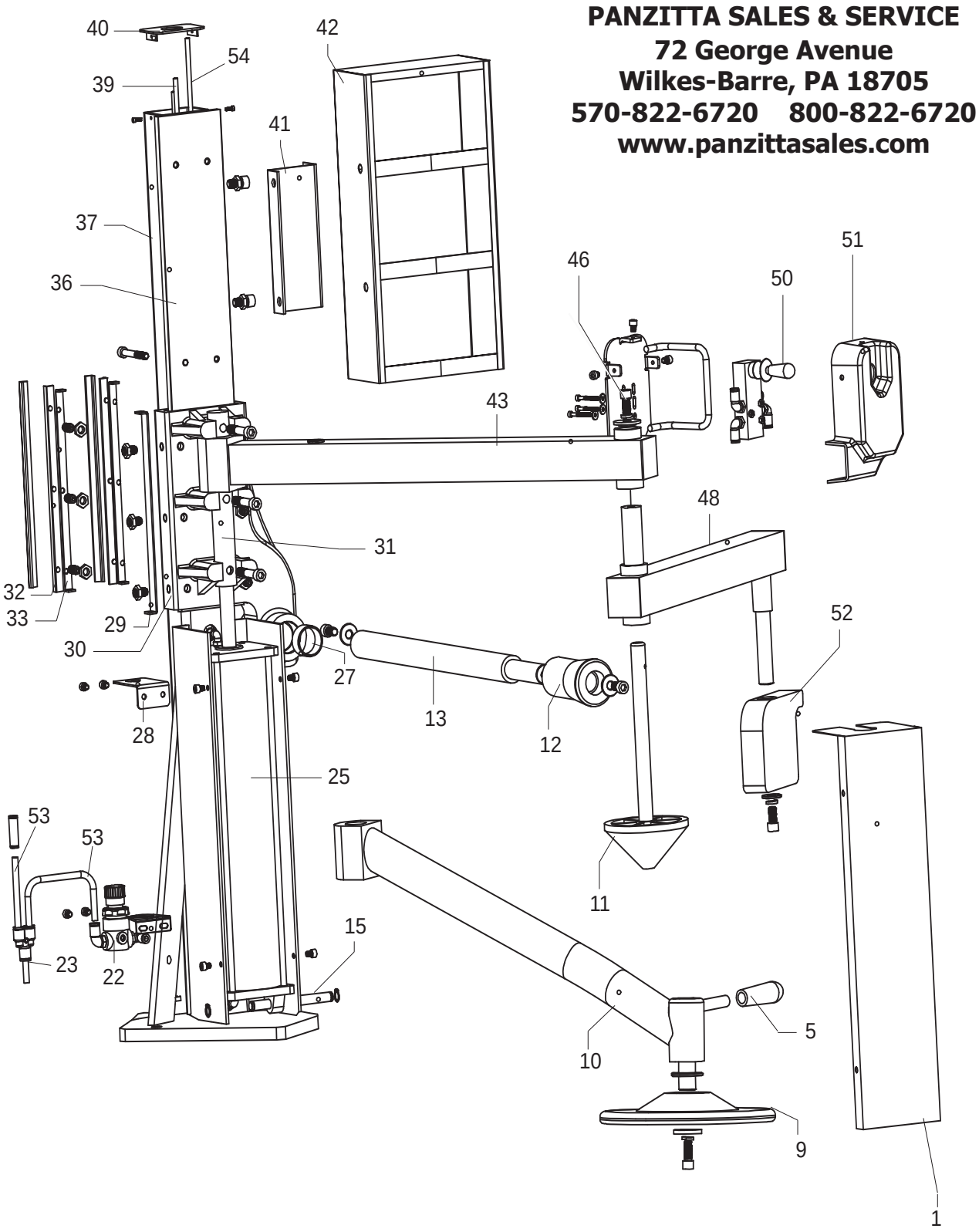

PANZITTA SALES & SERVICE
72 George Avenue
Wilkes-Barre, PA 18705
570-822-6720 800-822-6720
www.panzittasales.com

1	4-114895	CARTER CILINDRO	COVER CYLINDER
5	425219	VOLANTINO	KNOB
9	4-114928	DISCO	TRAY
10	4-114913	BRACCIO	ARM
11	5-104737	CONO CPL.	CONE ASSEMBLY
12	4-114927	RULLO	ROLL
13	4-114919	BARRA	BAR
15	4-114901	PERNO	PIN
22	5-104736	REGOLATORE DI PRESSIONE	PRESSURE REGULATOR
23	3093988	TUBO	HOSE
25	5-104725	CILINDRO	CYLINDER
27	4218738	BOCCOLA	BUSH
29	4-114907	PELLICOLA	PELLICLE
30	4-114883	PATTINO	SLIDING
31	4-114885	ALBERO	SHAFT
32	4-114902	TAMPONE	PAD
33	4-114903	PELLICOLA	PELLICLE
36	4-114882	PIASTRA DI SCORRIMENTO	SLIDING
37	4-114881	TELAIO	WELDED FRAME
39	4-115227	TUBO	HOSE
40	4-114886	COPERCHIO	COVER
41	4-114891	SUPPORTO	SUPPORT
42	4-114898	SCATOLA	BOX
43	4-114908	BRACCIO SUPERIORE	TOP ARM
46	4-114978	RONDELLA	WASHER
48	4-114911	BRACCIO	MID ARM
50	5-101552	VALVOLA	VALVE
51	4-113163	COPERCHIO IN PLASTICA	PLASTIC COVER
52	4--114951	UTENSILE	TOOL
53	321200	TUBO	HOSE
54	358385	TUBO	HOSE

PANZITTA SALES & SERVICE
72 George Avenue
Wilkes-Barre, PA 18705
570-822-6720 800-822-6720
www.panzittasales.com