8800 Tire Changer
Parts Reference

Form # 4980-1

PANZITTA SALES & SERVICE
72 George Avenue
Wilkes-Barre, PA 18705
570-822-6720 800-822-6720
www.panzittasales.com

FMC

Table of Contents

Drawing	Parts Groupings	Page
Figure 1	Cabinet, Tower and Shaft Assembly	2-3
Figure 2	Cylinder Assembly	4-5
	Labels and Decals	6
Figure 3	Bead Seater Assembly	7
Figure 4	Clutch Assembly	8
Figure 5	Swing Arm Assembly	9
Figure 6	Foot Pedal Assembly	10-11
Figure 7	Tools and Standard Accessories	12

PANZITTA SALES & SERVICE
72 George Avenue
Wilkes-Barre, PA 18705
570-822-6720 800-822-6720
www.panzittasales.com

Figure 1

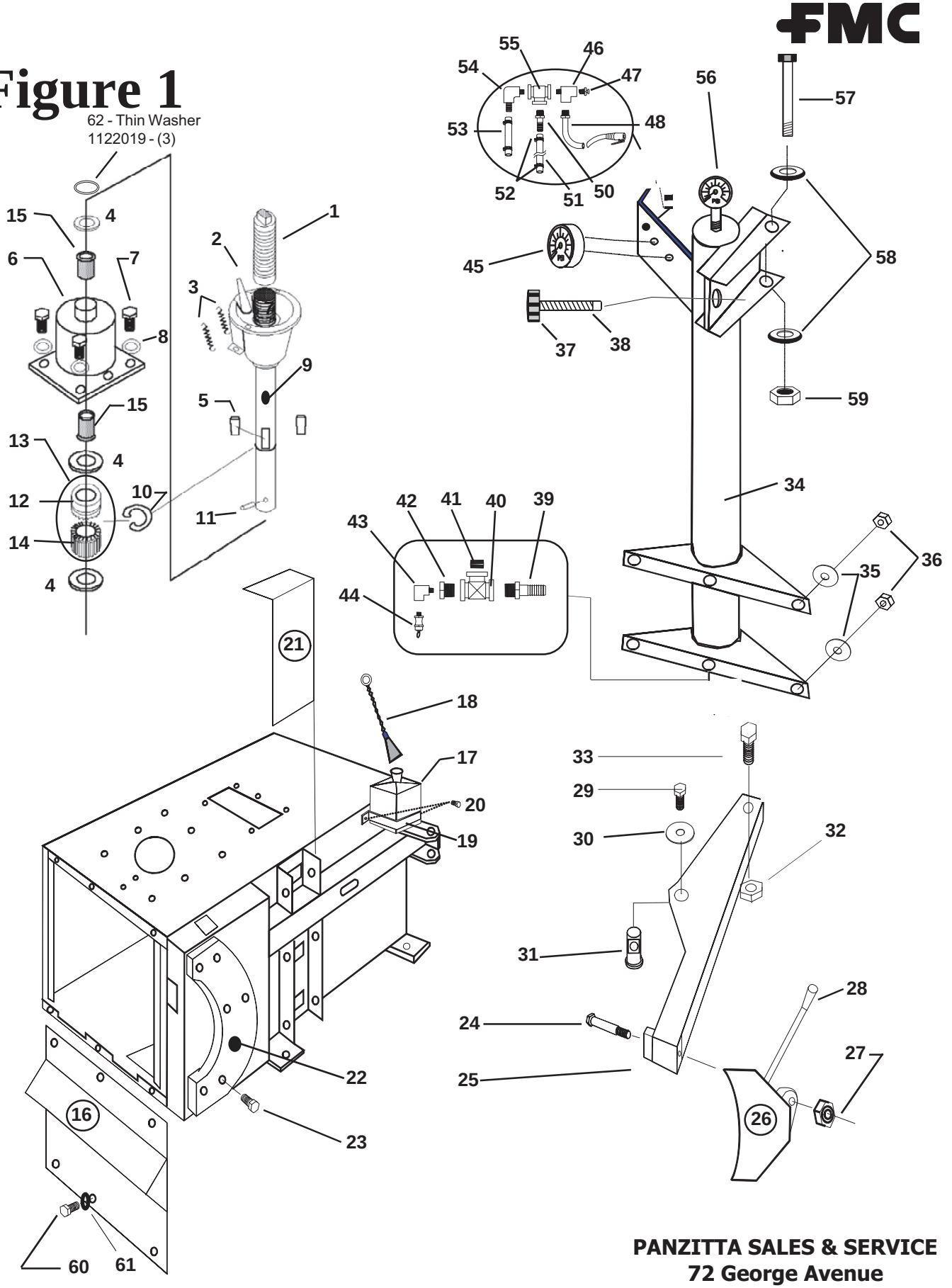

PANZITTA SALES & SERVICE
72 George Avenue
Wilkes-Barre, PA 18705
570-822-6720 800-822-6720
www.panzittasales.com

REF	PART NO	DESCRIPTION
1	87046	Hold Down Shaft
2	87061	Positioning Pin
3	87062	Extension Spring (2 Used)
4	87047	Thrust Washer (4 Used)
5	1104337	Sq. Key 1/4 x 1-1/8" (2 used)
6	87041	Transmission Housing
7	1100064	Screw HHC 1/2-13x1-1/2"
8	1100257	1/2" Flat Washer (4 Used)
*	1100245	1/2" Split Lock washer (4 Used)
9	87288	Shaft Assembly, transmission
10	1118816	1-1/4" External Snap Ring
11	1110190	3/8 dia. x 1-1/2" lg. Dowel Pin
12	**87048**	**Upper Clutch Plate**
13	**87054**	**Pinion Assembly**
14	**87052**	**Transmission Pinion**
*****	**1185277**	**1/4 dia. x 3/4 lg. Roll Pin**
15	87057	Flanged Bushing
16	**87337**	**Front Cover Assembly**
*****	**66695**	**Edge Protector (Bottom Panel)**
17	66006	Lube Bottle
18	1267267	Dauber Wire (for Lube Bottle)
19	66756	Lube Bottle Holder
20	1101988	Self-tap Screw 1/4-20x3/4"
21	87163	Cover
22	87088	Bead Breaker Pad
23	1101988	Self-tap Screw 1/4-20x3/4"
24	1122030	Screw HHC 1/2-13x4"
25	**87005**	**Bead Breaker Arm Weldment**
*****	**87159**	**Spring, Bead Breaker to Cabinet**
*****	**87221**	**Bead Breaker Arm Bushings (2)**
26	87007	Bead Breaker Blade Weldment
27	1120242	ESNA Hex Nut 1/2x13
28	87127	Rod Cap
29	1100071	Hex Hd. Screw 3/8-16x1/2"
30	1101984	Flat Washer
31	87004	Link Pivot Arm Bushing
32	1122134	Nut
33	1100797	Shoulder Bolt
34	87327	Tower Weldment
35	1100257	Flat Washer 1/2"
36	1120242	ESNA Nut 1/2-13
37	87104	Knob, Adjustment
38	87236	Rod, Adjustment
39	**66588**	**Barb Fitting 3/4NPT for 3/4 Hose**
40	**1105063**	**Tee Pipe, Black 3/4 NPT**
41	**1105707**	**Close Nipple, Black**
42	**1106428**	**Pipe Bushing 3/4 - 1/4 NPT**
43	**1101642**	**1/4" Street Tee**
*****	**66719**	**3/4" Air Hose**
*****	**1101204**	**3/4" Hose Clamp**
44	**66329**	**Pressure Release Valve Assy.**

REF	PART NO	DESCRIPTION
45	66170	Air Gauge
46	**66522**	**Poppet Stem**
*****	**1107385**	**Washer (Bleeder to Bracket)**
*****	**1177420**	**“O”ring Seal**
*****	**1101723**	**Crescent Retaining Ring**
47	**66472**	**Valve Bleeder Body**
48	**87161**	**Inflation hose assy.**
50	**67555**	**Barb Fitting/Orifice Assy.**
51	**1101915**	**1/4" Air Hose (Gauge to Bleeder)**
52	**1101834**	**Hose Clamp 1/4" (Gauge)**
53	**1101914**	**3/8" Air Hose**
*****	**1101923**	**3/8" Hose Clamp**
*****	**87142**	**Rubber Grommet**
54	**67243**	**90 deg. Barb Fitting 1/4 x 1/4"Hose**
55	**1105160**	**Steel Tee 1/4 NPT**
56	87341	Air Gauge, 300 PSI
57	1101985	Bolt 3/4-10x7" grade 5
58	1107387	Washer 3/4" (2 Used)
59	1120245	Nut 3/4"-10 Poly
60	1101988	Self-tapping Screw 1/4-20x3/4"
61	1101930	Washer
62	1122019	Washer - thin

***** Indicates not illustrated

[ ] Indicates the item is located sub-assembly

PANZITTA SALES & SERVICE
72 George Avenue
Wilkes-Barre, PA 18705
570-822-6720 800-822-6720
www.panzittasales.com

Figure 2

87116 - COMPLETE CYLINDER ASSEMBLY

PANZITTA SALES & SERVICE
72 George Avenue
Wilkes-Barre, PA 18705
570-822-6720 800-822-6720
www.panzittasales.com

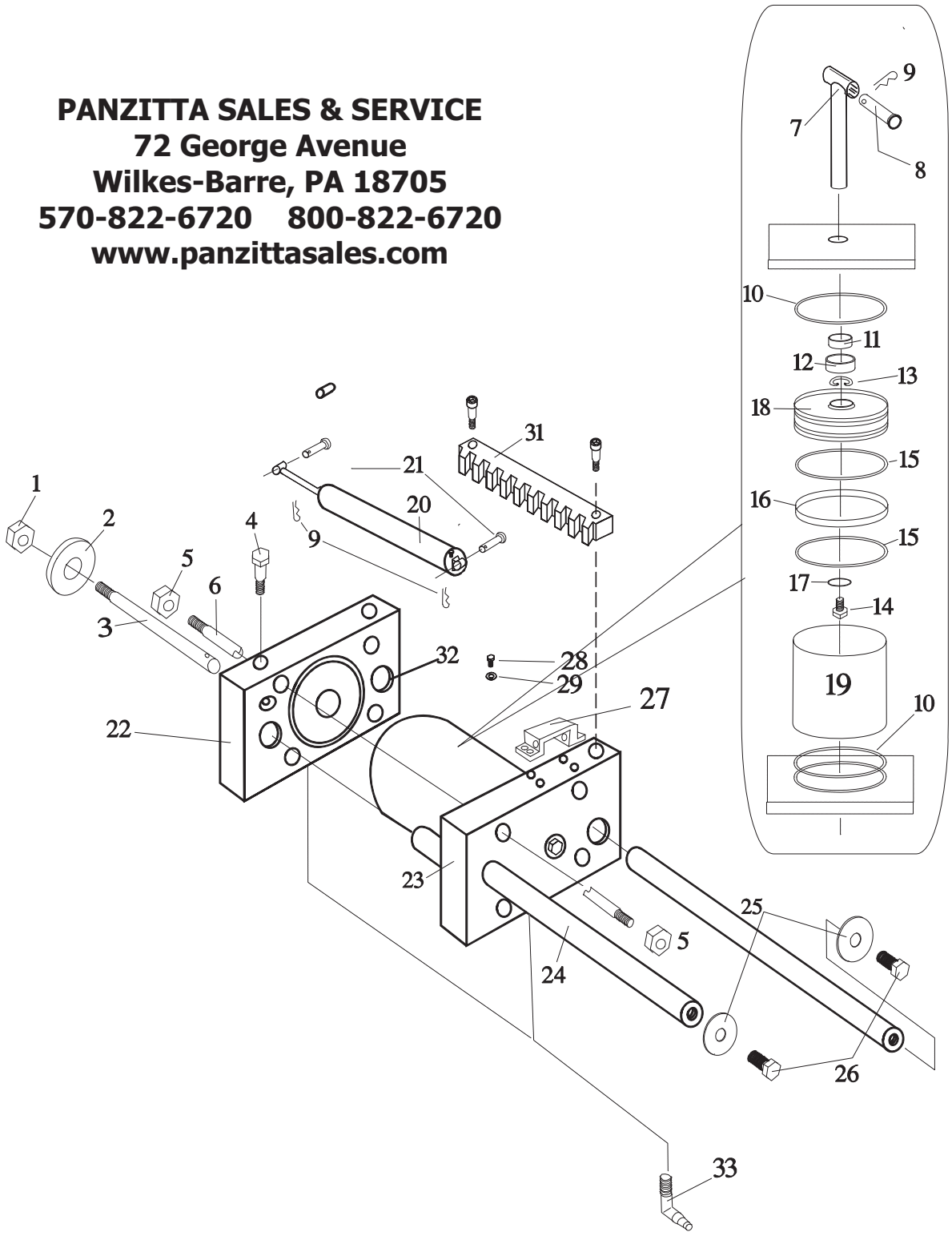

REF	PART NO	DESCRIPTION
1	1110438	ESNA Nut 3/4-16 UNF
2	87181	Polyurethane Washer
3	87068	Guide Rod (Bead Breaker Arm)
4	87067	Shoulder Bolt
5	**1121510**	**Hex Nut 7/16-14 UNF**
*****	**1100244**	**Lock washer 7/16 ID**
6	66710	Threaded Stud 7/16-14x11-1/4"
7	87146	Piston Rod
8	87149	Clevis Pin 1" x 3-1/2"
9	1100352	Cotter Pin 1/8 x 1-1/2" long
10	**1101622**	**"O" ring 7x7-1/4x1/8"**
11	**66017**	**"U" Cup (Rod Seal)**
12	**66019**	**Bearing**
13	**1118730**	**Retaining Ring**
14	**1100026**	**Screw HHCS 5/8-18x1-1/2"**
15	**1101621**	**"O" ring 6-1/2x7x1/4"**
16	**66020**	**Wear Ring**
17	**1101690**	**"O" ring 13/16ID x 1-3/32ODx139**
18	66016	Piston
19	66546	Cylinder Body
20	87234	Fox Shock Absorber
21	87148	Clevis Pin 3/4x3-1/2"
22	87020	Piston side End Cap
23	87021	Closed side End Cap
24	87070	Cylinder Guide Rod
25	**1100266**	**Flat Washer 5/8"**
*****	**1100247**	**Split Lock washer 5/8"**
26	**1100026**	**Screw HHC 5/8-18x1-1/2"**
27	87377	Shock Mount Bracket
28	1100045	Screw HHC 5/16-18x1.0"
29	1100242	Split Lock washer 5/16"
30	87131	Shoulder Screw
31	87071	Rack
32	**87128**	**Guide Rod Bushings**
*****	**87132**	**Rod Wipers**
33	**67243**	**Barb Fitting 90 deg.**
*****	**1101834**	**Hose Clamp 1/4"**
*****	**1101915**	**Air Hose 1/4 "ID (two pieces)**

* NOT SHOWN

PANZITTA SALES & SERVICE
72 George Avenue
Wilkes-Barre, PA 18705
570-822-6720 800-822-6720
www.panzittasales.com

Labels & Decals

REF.	PART NO	DESCRIPTION
1	87344	Decal "Air Power" Older units only
2	87360	Decal Stripe
3	87347	Label "Patent "
4	87362	John Bean
5	87361	Decal "Sig Series" Stripe
6	87124	Decal " Safety Instructions"
7	66726	Label "Danger"
10	44254	FMC Logo 2"X6" (Red)
11	66332	Warning
12	67170	Caution (on breaker arm)
13	87150	Caution

* Picture may not show exact location of decals

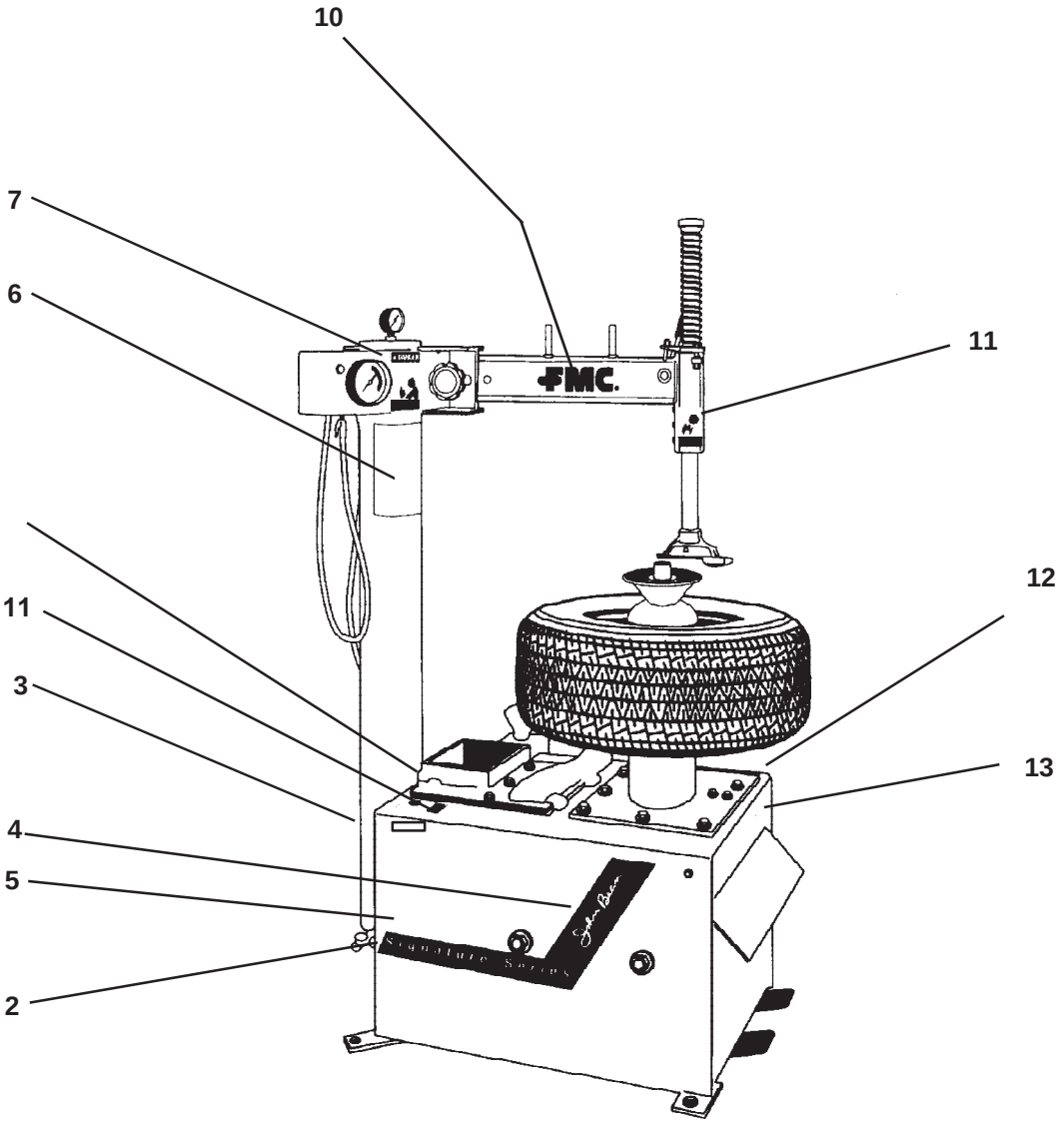

PANZITTA SALES & SERVICE
72 George Avenue
Wilkes-Barre, PA 18705
570-822-6720 800-822-6720
www.panzittasales.com

REF	PART NO	DESCRIPTION
1	87182	Cylinder, 7 inch
2	**87129**	**Barb Fitting 1/8NPT x 1/4 hose**
*****	**1101915**	**1/4 Air Hose (to 87129)**
*****	**1101834**	**1/4" Hose Clamp**
3	87174	Plate - Cylinder to Rod
4	1109585	Jam Nut 1/4-28
5	1122118	Shoulder Bolt
6	66719	3/4" Air Hose
7	1101204	Hose Clamp
8	1101984	Flat Washer
9	8027275	Grommet
10	87180	Bead Seater Support Weldment
11	1100242	5/16" Split Lock washer
12	1100044	Screw HHC 5/16-18x3/4"
13	87013	Bead Seater Ring Weldment
14	87183	Black Polyurethane Hose
15	1177395	“O” ring
16	69933	Breather
17	**1187612**	**Int. Tooth Lock washer 1/4"**
*****	**1107382**	**5/16 SAE Washer**

* NOT SHOWN

Figure 3

87115 -Bead Seater Assembly

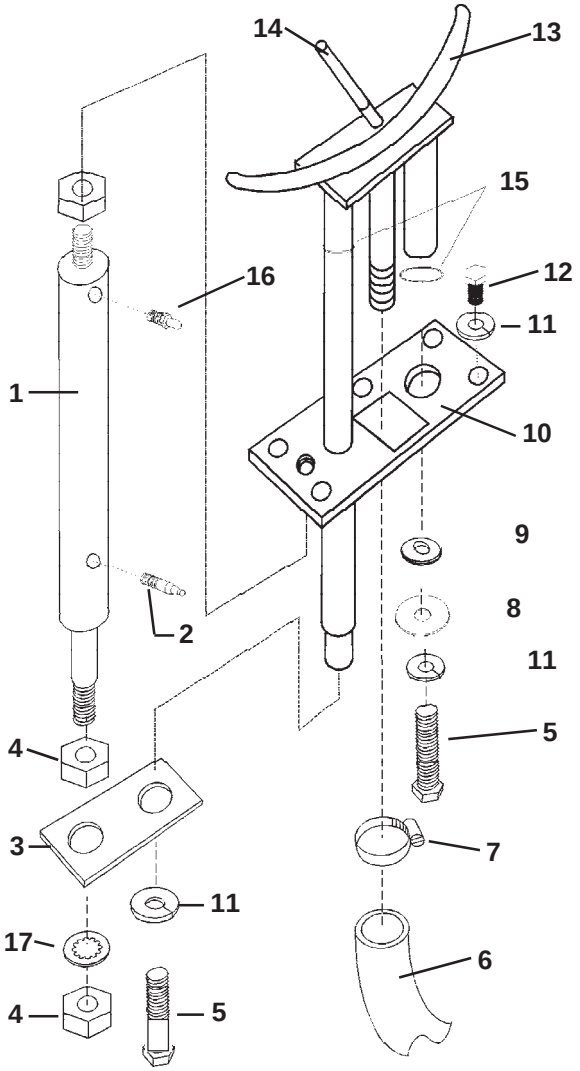

PANZITTA SALES & SERVICE
72 George Avenue
Wilkes-Barre, PA 18705
570-822-6720 800-822-6720
www.panzittasales.com

Figure 4

87114 - Clutch Assembly

REF	PART NO	DESCRIPTION
1	87168	Clutch Bracket Weldment
2	87167	Clutch Plate Weldment
3	1120240	ESNA Nut 3/8-16
4	87119	Clutch Air Cylinder
5	1101609	1/4-20 ESNA Nut
6	1101998	1/8 NPT Street Tee
7	**87129**	**Barb Fitting 1/8 NPT x1/4**
*****	**1101834**	**1/4" Hose Clamp**
8	1100086	Screw HHC 3/8-16x1-3/4"
9	1107383	Flat Washer 3/8"
10	87134	Clutch Spacer
11	1103184	Screw HHC 1/4-20x1-1/2"
12	87114	Clevis

PANZITTA SALES & SERVICE
72 George Avenue
Wilkes-Barre, PA 18705
570-822-6720 800-822-6720
www.panzittasales.com

* NOT SHOWN

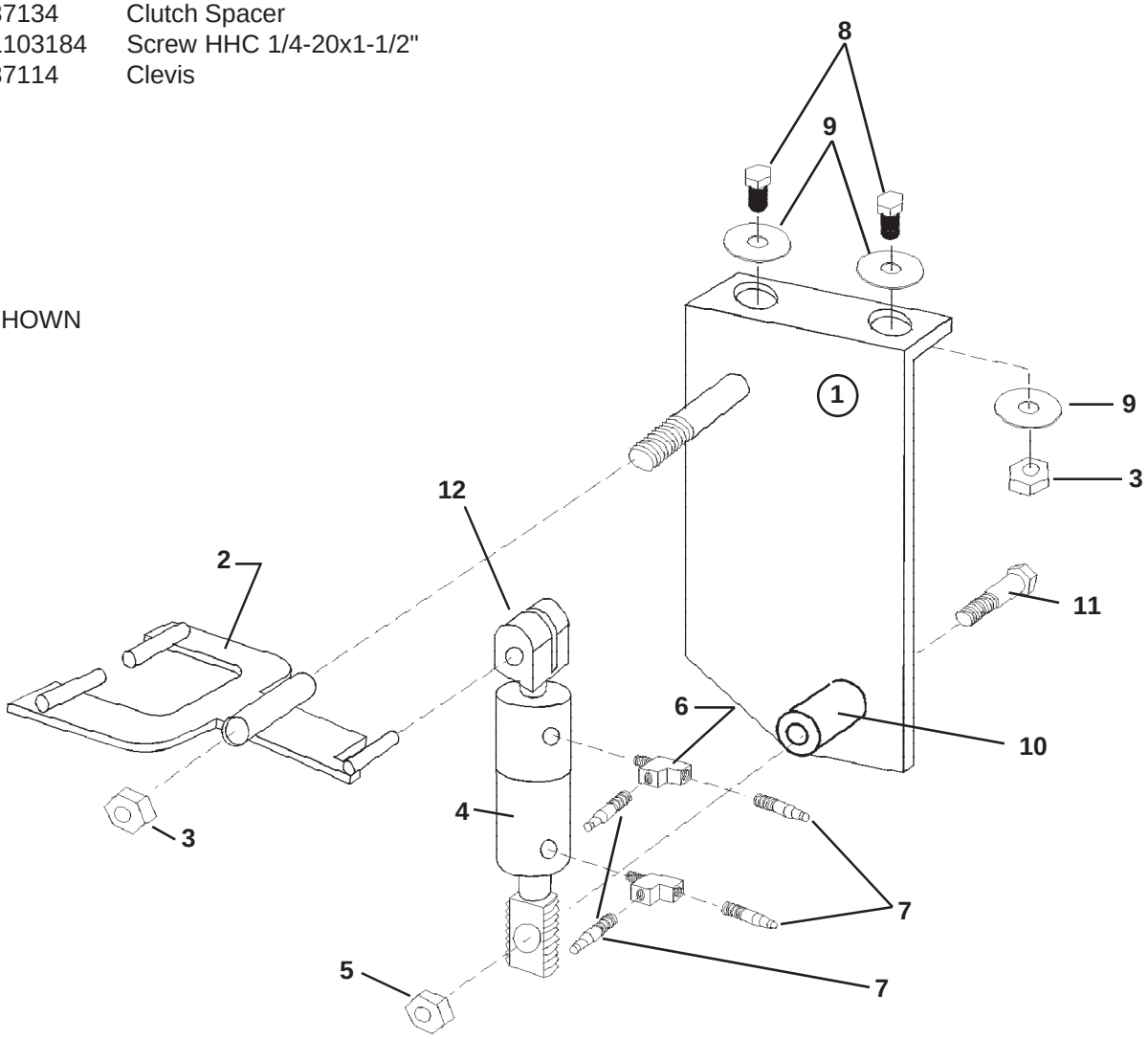

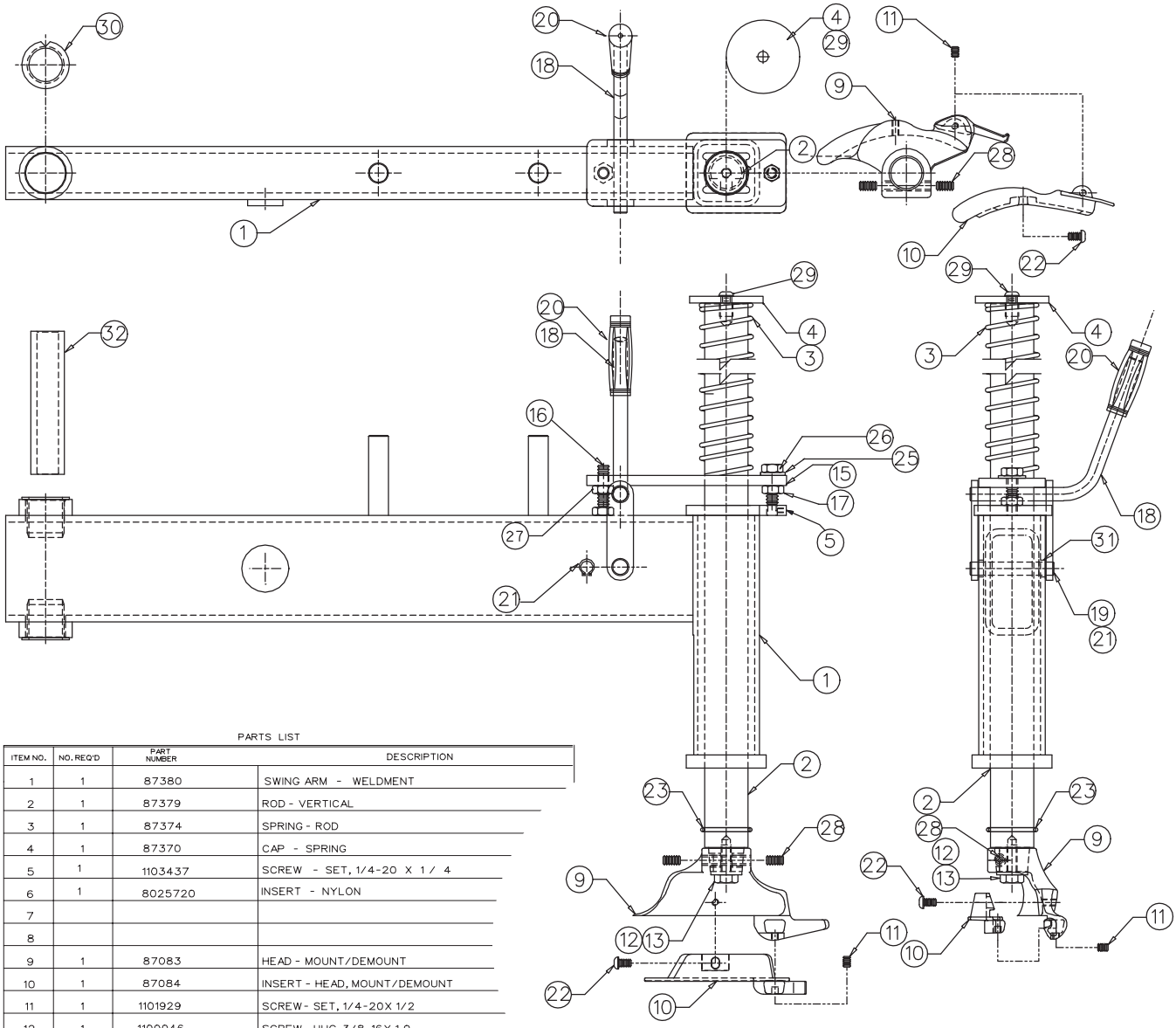

PARTS LIST

ITEM NO.	NO. REQ'D	PART NUMBER	DESCRIPTION
1	1	87380	SWING ARM - WELDMENT
2	1	87379	ROD - VERTICAL
3	1	87374	SPRING - ROD
4	1	87370	CAP - SPRING
5	1	1103437	SCREW - SET, 1/4-20 X 1/ 4
6	1	8025720	INSERT - NYLON
7			
8			
9	1	87083	HEAD - MOUNT/DEMOUNT
10	1	87084	INSERT - HEAD, MOUNT/DEMOUNT
11	1	1101929	SCREW - SET, 1/4-20X 1/2
12	1	1100046	SCREW - HHC, 3/8-16X 1.0
13	1	87203	WASHER - FLAT
14			
15	1	87364	PLATE - LOCK, SWINGARM
16	1	1122142	SCREW - SET 3/8 X 2, HDLESS H.S, FLT PT.
17	1	1122138	NUT - JAM CENTER LOCK, 3/8- 16 UNC-2B
18	1	87375	LOCK - WELD ASSEMBLY
19	1	87371	SHAFT - LEVER LOCK
20	1	87365	GRIP - FLEX
21	2	1118808	RING - RETAINING, 5/8
22	1	1177619	SCREW - BHSC, 1/4-20X 1/2
23	1	1101840	"O"-RING
24			
25	1	1107383	WASHER - FLAT, 3/8
26	1	1102366	SCREW - HEX SOC HD CAP, 3/8 - 16 X 2.00
27	2	1121551	NUT - JAM, 3/8-16
28	2	1100100	SCREW - SET, 3/8-16X 3/4
29	1	1187799	SCREW-BB HS 3/8-16 X 3/4 UNC-2A
30	2	87057	BUSHING - FLANGED
31	2	87388	SPACER - SWING ARM
32	1	87220	PIVOT BUSHING -SWING ARM

PANZITTA SALES & SERVICE
72 George Avenue
Wilkes-Barre, PA 18705
570-822-6720 800-822-6720
www.panzittasales.com

Figure 5
87382 - Swing Arm Assembly

PANZITTA SALES & SERVICE
72 George Avenue
Wilkes-Barre, PA 18705
570-822-6720 800-822-6720
www.panzittasales.com

Figure 6

87331 - Foot Pedal Assembly

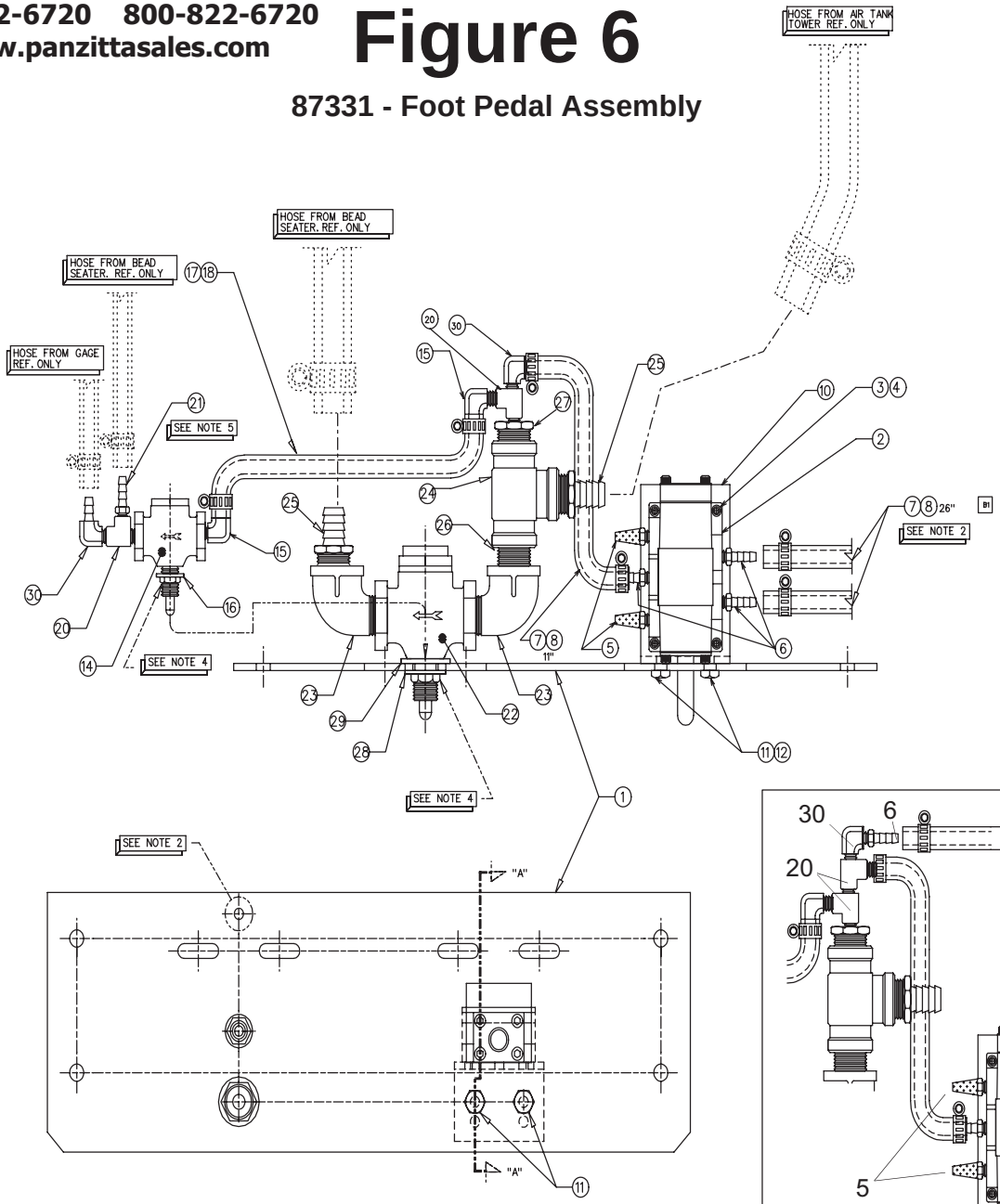

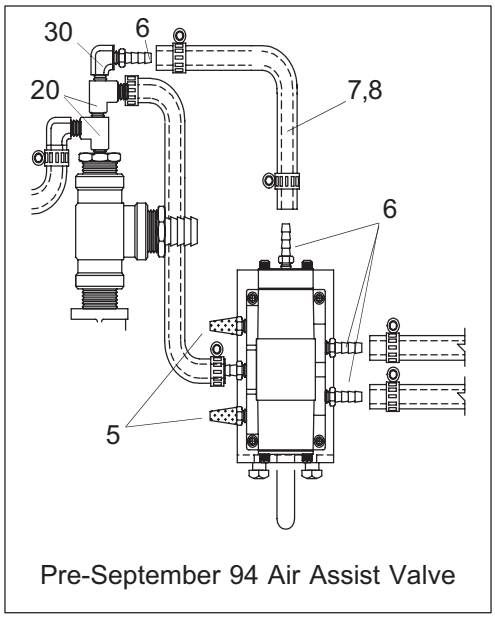

Pre-September 94 Air Assist Valve

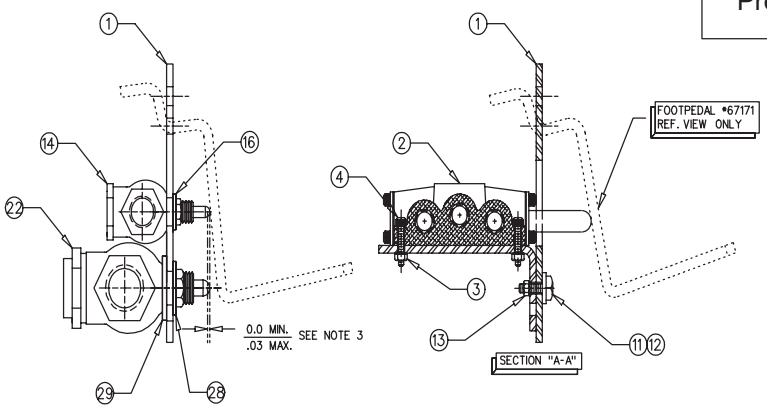

NOTE: Some early units may have used a valve with air assist. For 4-Way valve service replacement, use p/n 66782 non-assist.

PANZITTA SALES & SERVICE
72 George Avenue
Wilkes-Barre, PA 18705
570-822-6720 800-822-6720
www.panzittasales.com

87331 - Foot Pedal Assembly

PARTS LIST

ITEM NO.	NO. REQ'D	PART NO.	DESCRIPTION
1	1	87112	PANEL - VALVE MOUNTING
2	1	66782	VALVE - 5 PORT/2 POSITION
3	2	1101540	NUT KEPS, #1/4-20
4	2	1102348	SCREW SHC, #1/4-20 X 1¾
5	2	59659	MUFFLER, ¼ NPT
6	3	67541	(3-87165) (1-66116) BARB FITTING - STRAIGHT 1/4 NPT
7	4	1101834	(3-87165) (1-66116) CLAMP - HOSE (1/4 HOSE)
8	5.17 FT	1101915	CUT (2) PCS 26", (1) 10" HOSE - AIR 1/4
9			
10	1	67783	BRACKET - VALVE, 5 PORT, 2 POSITION
11	2	1111599	SCREW HHC, 1/4-20 X 5/8
12	2	1100241	WASHER - LOCK, 1/4
13	2	1101540	NUT - KEPS, 1/4-20
14	1	66115	VALVE - QUICK CLOSING (INFLATION)
15	2	67536	(1-66115) (1-66116) BARB FITTING 90° 1/4 NPT ⅜BARB
16	1	1187950	WASHER - INTERNAL TOOTH
17	.75 FT.	1101914	HOSE - AIR 3/8
18	2	1101923	(1-66115) (1-66116) CLAMP - HOSE (3/8 HOSE)
19			
20	2	1101642	(1-66115) TEE - STREET ¼ NPT
21	1	67555	BARB FITTING/ORIFICE
22	1	66116	VALVE - QUICK CLOSING (DUMP)
23	2	1105386	ELBOW - STREET, 3/4 NPT
24	1	1105063	TEE - PIPE , BLACK, 3/4 NPT
25	2	66588	BARB FITTING, 3/4 NPT
26	1	1105707	NIPPLE - PIPE, CLOSE
27	1	1106428	BUSHING - THD. PIPE¾NPT - ¼ NPT
28	1	1101627	WASHER - INTERNAL TOOTH
29	2	1107387	WASHER - FLAT, 3/4
30	3	67243	BARB FITTING, 90 DEG¼NPT/1/4 BARB
31			

NOTES:

1) USE PIPE SEALANT OR TAPE ON ALL FITTINGS. NO LEAKS PERMISSABLE.

2) ROUTE HOSES NOTED UNDER ITEM 2 AND NEATLY TIE-WRAP HOSES TO ITEM 1 BY THRU HOLE PROVIDED.

3) USE ITEMS 28 & 29 IN ANY COMBINATIONS ON ITEM 22 TO INSURE THAT ITEMS 14 & 22 ARE INLINE (0.0) OR THAT ITEM 14 IS .030 MAX. EXTENDED FURTHER AHEAD THAN ITEM 22.

4) MOUNTING NUT FOR ITEMS 14 & 22 IS PROVIDED WITH VALVES FROM VENDOR.

5) MAKE SURE THAT THIS ITEM 21 IS INSTALLED - NO SUBSTITUTIONS. THIS BARB/ORIFICE CONTROLS THE RATE OF ASCENT OF THE BEAD SEATER.

6) MAKE SURE THAT ITEMS 14 & 22 ARE ORIENTED CORRECTLY BY NOTING DIRECTION OF ARROWS CAST INTO BODY OF VALVES.

7) APPLY LOCTITE #222 TO ALL MECHANICAL FASTENERS (SCREWS-NUTS).OR OMNIFIT 1150.

8) ORIENT ALL HOSE CLAMPS FOR EASY ACCESS BY FIELD SERVICE TECHS.

PANZITTA SALES & SERVICE
72 George Avenue
Wilkes-Barre, PA 18705
570-822-6720 800-822-6720
www.panzittasales.com

Figure 7
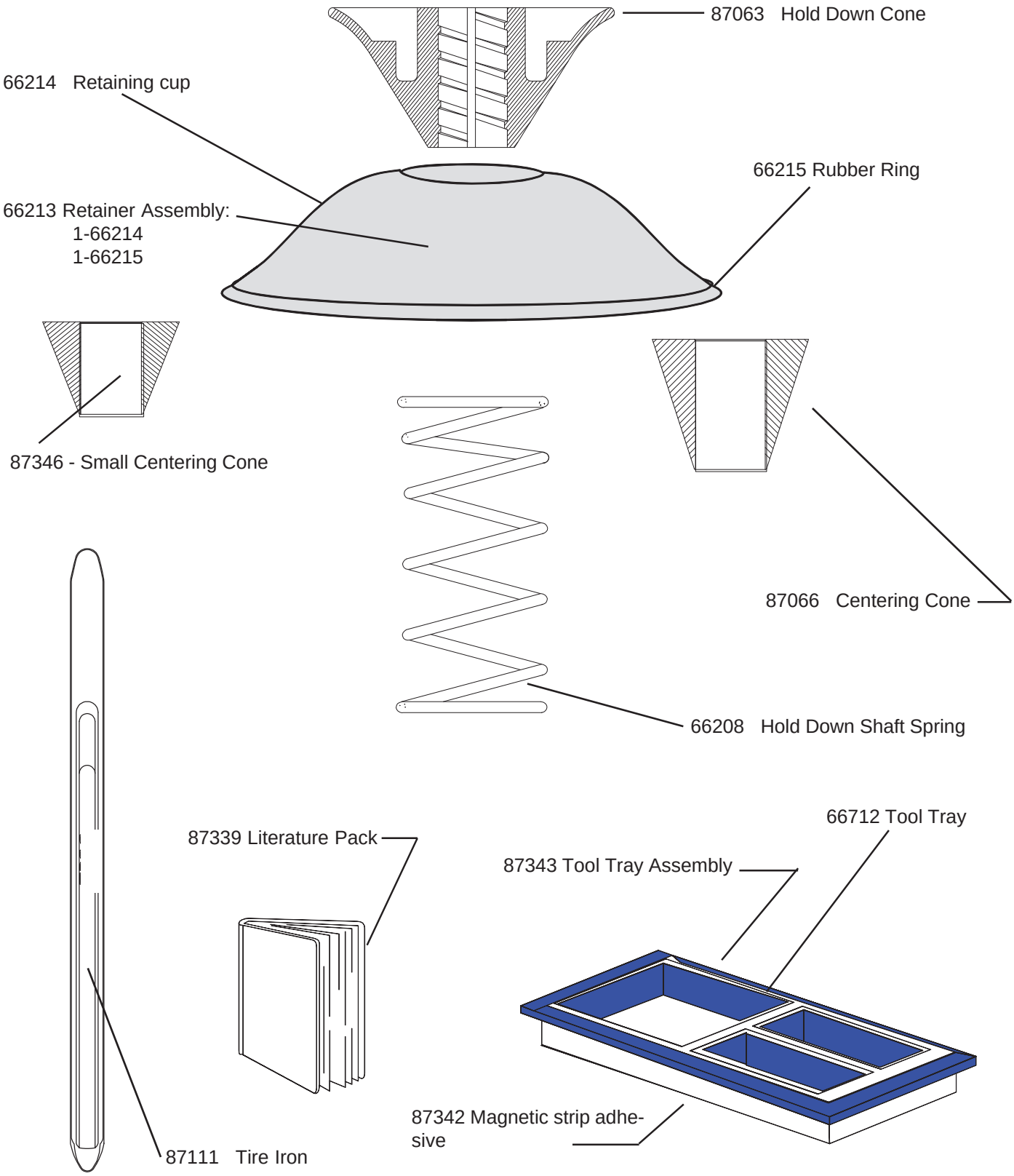
Tools & Standard Accessories