PANZITTA SALES & SERVICE
72 George Avenue
Wilkes-Barre, PA 18705
570-822-6720 800-822-6720
www.panzittasales.com

A 2019
24"

The "Spare parts" booklet does not authorize the user to carry out work on the machine unless expressly specified in the instruction manual, but does enable him to provide accurate information to the assistance service in order to reduce downtime.

PEZZI DI RICAMBIO
SPARE PARTS LIST
ERSATZTEILLISTE
PIECES DE RECHANGE

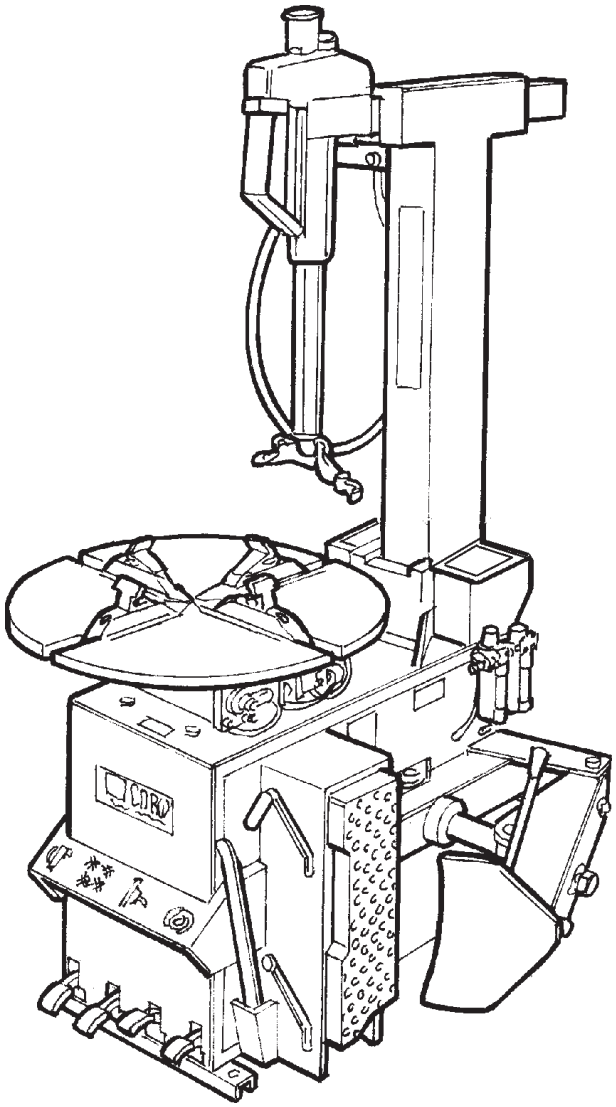

In produzione da
Production from
Herstellung ab
Production

05 / 02

Versione

1.0

Der Katalog Ersatzteile stellt keine Genehmigung zu eigenmächtigen Eingriffen dar (mit Ausnahme jener im Handbuch beschriebenen), sondern er soll den Anwender in die Lage versetzen, dem technischen Service präzise Informationen zu liefern, um die Reparaturzeiten zu verkürzen.

CORGHI

Le livret "Pièces de rechange", n'autorise pas l'utilisateur à intervenir sur les machines, sauf pour tout ce qui est clairement décrit dans le manuel d'utilisation, mais lui permet de fournir des informations précises à l'assistance technique, afin de diminuer les délais d'intervention.

PANZITTA SALES & SERVICE
72 George Avenue
Wilkes-Barre, PA 18705
570-822-6720 800-822-6720
www.panzittasales.com

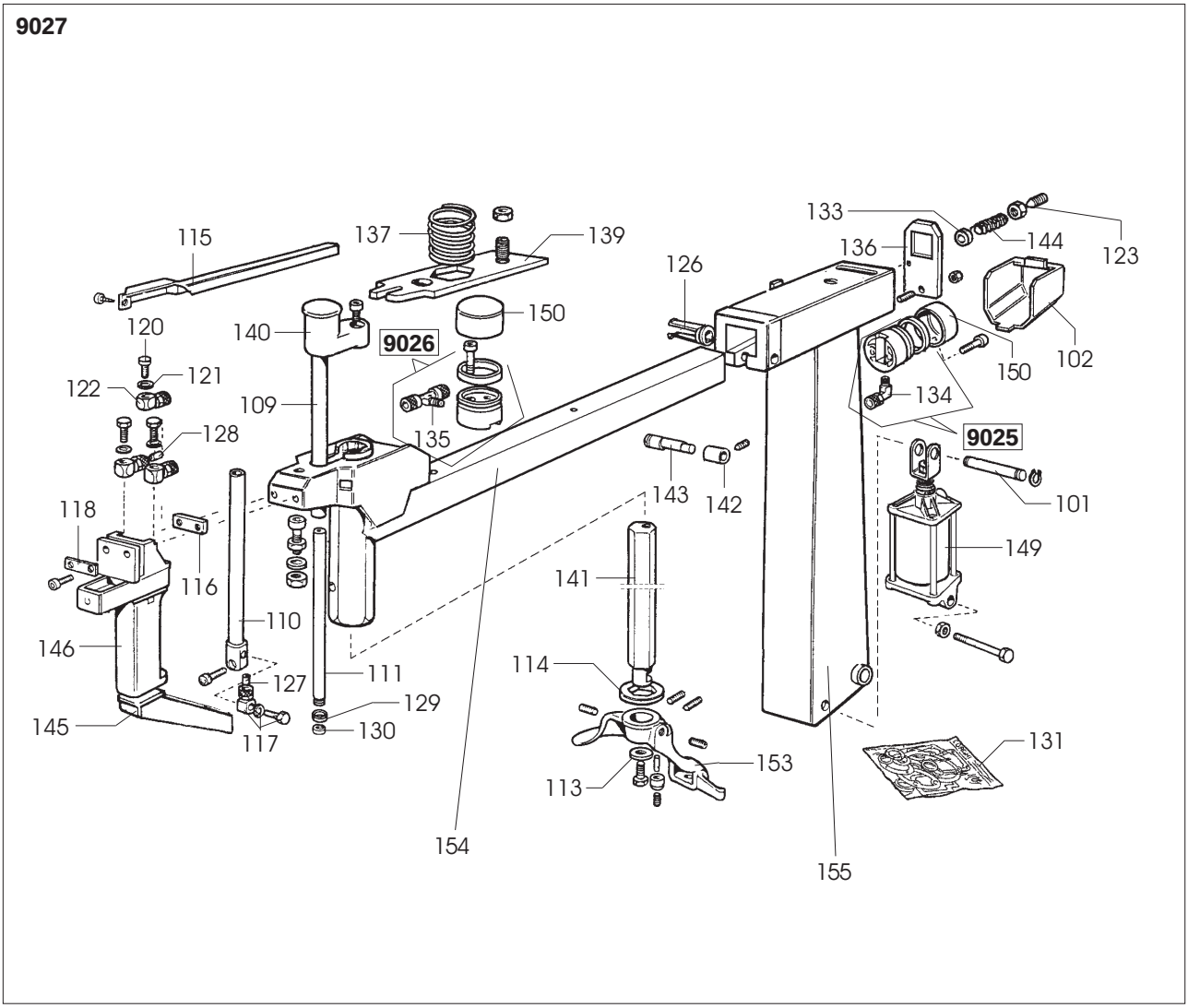

9027	**900262092**	**TESTATA COMPLETA**	**HEAD ASS.Y**	**KOPF**	**TETE**
0101	900326667	PERNO	PIN	ZAPFEN	PIVOT
0102	900426773	PROTEZIONE	SHIELD	ABDECKUNG	PROTECTION
0109	900338858	TUBO	PIPE	ROHR	TUYAU
0110	900238856	SUPPORTO	SUPPORT	LAGER	SUPPORT
0111	900338855	STELO	STEM	SCHAFT	TIGE
0113	900350194	RONDELLA	WASHER	UNTERLEGSCHEIBE	RONDELLE
0114	900428681	ANELLO	RING	RING	ANNEAU
0115	900426763	GUIDA	GUIDE	FUEHRUNG	GLISSIERE
0116	900327284	PIASTRINA	PLATE	PLAETTCHEN	PLAQUETTE
0117	900427290	RACCORDO	CONNECTOR	ANSCHLUSS	RACCORD
0118	900327283	PIASTRINA	PLATE	PLAETTCHEN	PLAQUETTE
0120	900428719	VITE	SCREW	SCHRAUBE	VIS
0121	900428720	RONDELLA	WASHER	UNTERLEGSCHEIBE	RONDELLE
0122	900428718	ANELLO	RING	RING	ANNEAU
0123	900341836	ASTA	SHAFT	STANGE	BARRE
0126	900431061	BOCCOLA	BUSHING	LAGER	DOUILLE
0127	900327753	STROZZATORE	THROTTLER	DROSSELKLAPPE	ETRANGLEUR
0128	900331783	STROZZATORE	THROTTLER	DROSSELKLAPPE	ETRANGLEUR
0129	900427299	GUARNIZIONE	SEAL	DICHTUNG	JOINT
0130	900432090	ANELLO	RING	RING	ANNEAU
0131	900241484	KIT GUARNIZIONI	SEALS KIT	DICHTUNGSATZ	KIT JOINTS
0133	900339803	BOCCOLA	BUSHING	LAGER	DOUILLE
9025	900239805	PISTONE	PISTON	KOLBEN	PISTON
0134	900414842	RACCORDO	CONNECTOR	ANSCHLUSS	RACCORD
9026	900239806	PISTONE	PISTON	KOLBEN	PISTON
0135	900414859	RACCORDO	CONNECTOR	ANSCHLUSS	RACCORD
0136	900336142	PIASTRA	SLAB	PLATTE	PLAQUE
0137	900440342	MOLLA	SPRING	FEDER	RESSORT
0139	900340429	PIASTRA	SLAB	PLATTE	PLAQUE
0140	900440428	POMOLO	KNOB	BALLENGRIFF	POMMEAU
0141	900340430	BRACCIO	ARM	ARM	BRAS
0142	900339782	RULLO	ROLLER	WALZE	ROULEAU
0143	900339786	PERNO	PIN	ZAPFEN	PIVOT
0144	900439787	MOLLA	SPRING	FEDER	RESSORT
0145	900440692	PROLUNGA	EXTENSION CORD	VERLAENGERUNG	RALLONGE
0146	900231744	RUBINETTO	COCK	HAHN	ROBINET
0149	900244589	CILINDRO	CYLINDER	ZYLINDER	CYLINDRE
0150	900326537	CILINDRO	CYLINDER	ZYLINDER	CYLINDRE
0153	900258458	TORRETTA	HEAD	DREHKOPF	TOURELLE
0154	900261902	BRACCIO	ARM	ARM	BRAS
0155	900262088	**TESTATA**	**HEAD**	**KOPF**	**TETE**

PANZITTA SALES & SERVICE
72 George Avenue
Wilkes-Barre, PA 18705
570-822-6720 800-822-6720
www.panzittasales.com

PANZITTA SALES & SERVICE
72 George Avenue
Wilkes-Barre, PA 18705
570-822-6720 800-822-6720
www.panzittasales.com

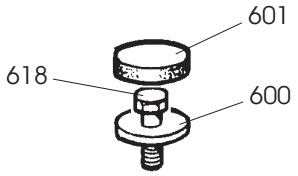

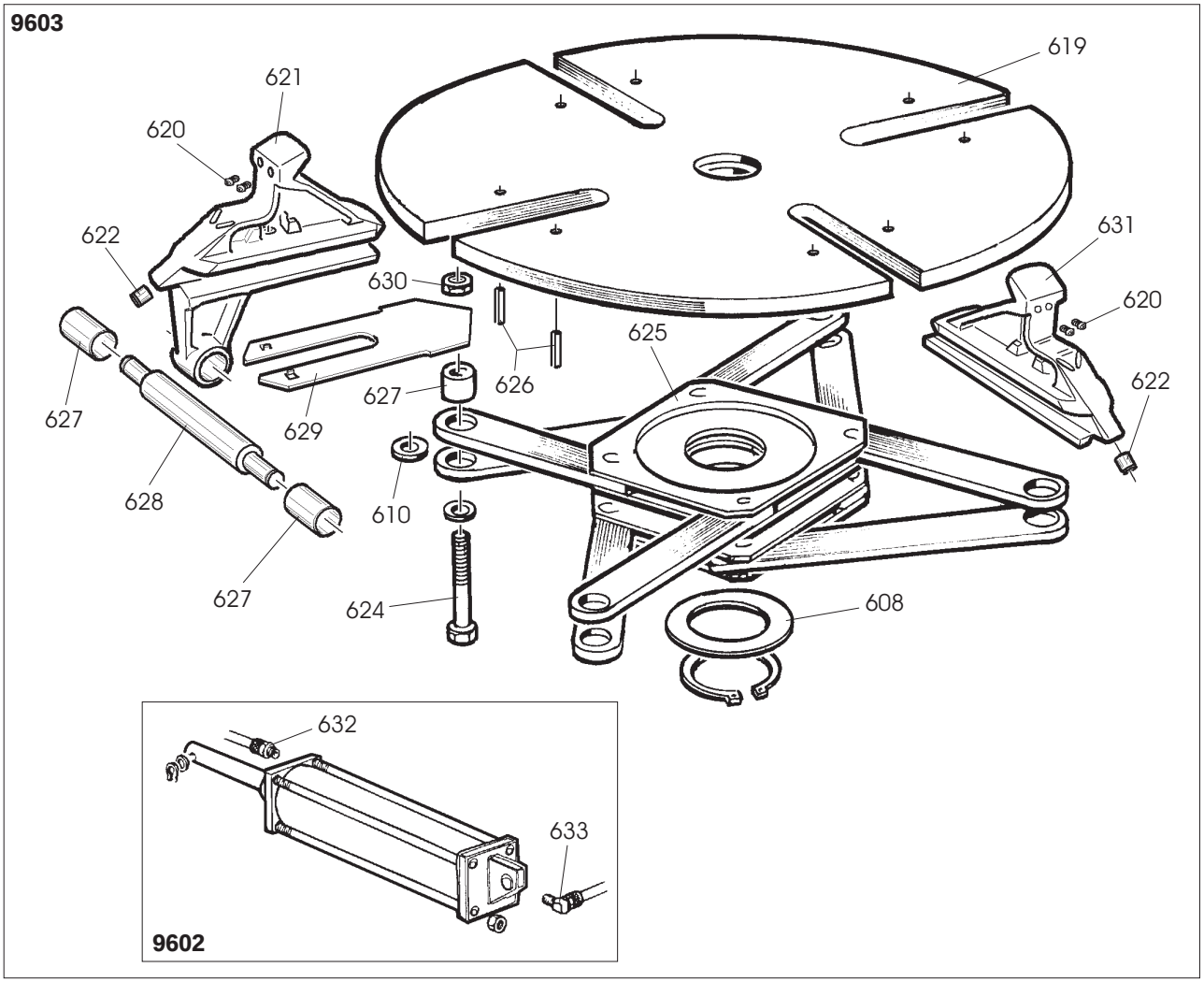

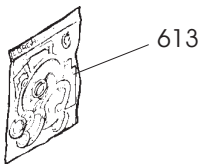

0600	900323363	RONDELLA	WASHER	UNTERLEGSCHEIBE	RONDELLE
0601	900426514	TAPPO	PLUG	STOPFEN	BOUCHON
0613	900238548	KIT GUARNIZIONI	SEALS KIT	DICHTUNGSATZ	KIT JOINTS
0618	900601216	VITE	SCREW	SCHRAUBE	VIS
9603	**900262065**	**AUTOCENTRANTE T.I.**	**TURNTABLE T.I.**	**SPANNFUTTER T.I.**	**PLATEAU AUTOC. T.I.**
9603	**900262379**	**AUTOCENTRANTE**	**TURNTABLE**	**SPANNFUTTER**	**PLATEAU AUTOC.**
0608	900455082	RONDELLA	WASHER	UNTERLEGSCHEIBE	RONDELLE
0610	900437964	RONDELLA	WASHER	UNTERLEGSCHEIBE	RONDELLE
0619	900253758	PIATTO	PLATE	TELLER	PLAT
0620	900339146	PUNTE DI BLOCC.	LOCKING PEAK	FESTKLEMMENSPITZE	POINTE DE BLOCAGE
0621	900262380	APPOGGIO	RIM SUPPORT	STUETZE	APPUI
0621	900262071	APPOGGIO T.I.	RIM SUPPORT T.I.	STUETZE T.I.	APPUI T.I.
0622	900441100	RACCORDO	CONNECTOR	ANSCHLUSS	RACCORD
0624	900602199	VITE	SCREW	SCHRAUBE	VIS
0625	900253776	FLANGIA	FLANGE	FLANSCH	FLASQUE
0626	900601059	SPINA	PLUG	STECKER	FICHE
0627	900353803	BOCCOLA	BUSHING	LAGER	DOUILLE
0628	900353804	PERNO	PIN	ZAPFEN	PIVOT
0629	900354638	COPRIASOLA	COVER	LOCHSTOPFEN	BOUCHON
0630	900601276	DADO	NUT	MUTTER	ECROU
0631	900262057	APPOGGIO T.I.	RIM SUPPORT T.I.	STUETZE T.I.	APPUI T.I.
0631	900262381	APPOGGIO	RIM SUPPORT	STUETZE	APPUI
9602	**900253784**	**CILINDRO DESTRO**	**CYLINDER RIGHT**	**ZYLINDER**	**CYLINDRE**
9602	**900253783**	**CILINDRO SINISTRO**	**CYLINDER LEFT**	**ZYLINDER**	**CYLINDRE**
0632	900441568	RACCORDO	CONNECTOR	ANSCHLUSS	RACCORD
0633	900443367	RACCORDO	CONNECTOR	ANSCHLUSS	RACCORD

PANZITTA SALES & SERVICE
72 George Avenue
Wilkes-Barre, PA 18705
570-822-6720 800-822-6720
www.panzittasales.com

PANZITTA SALES & SERVICE
72 George Avenue
Wilkes-Barre, PA 18705
570-822-6720 800-822-6720
www.panzittasales.com

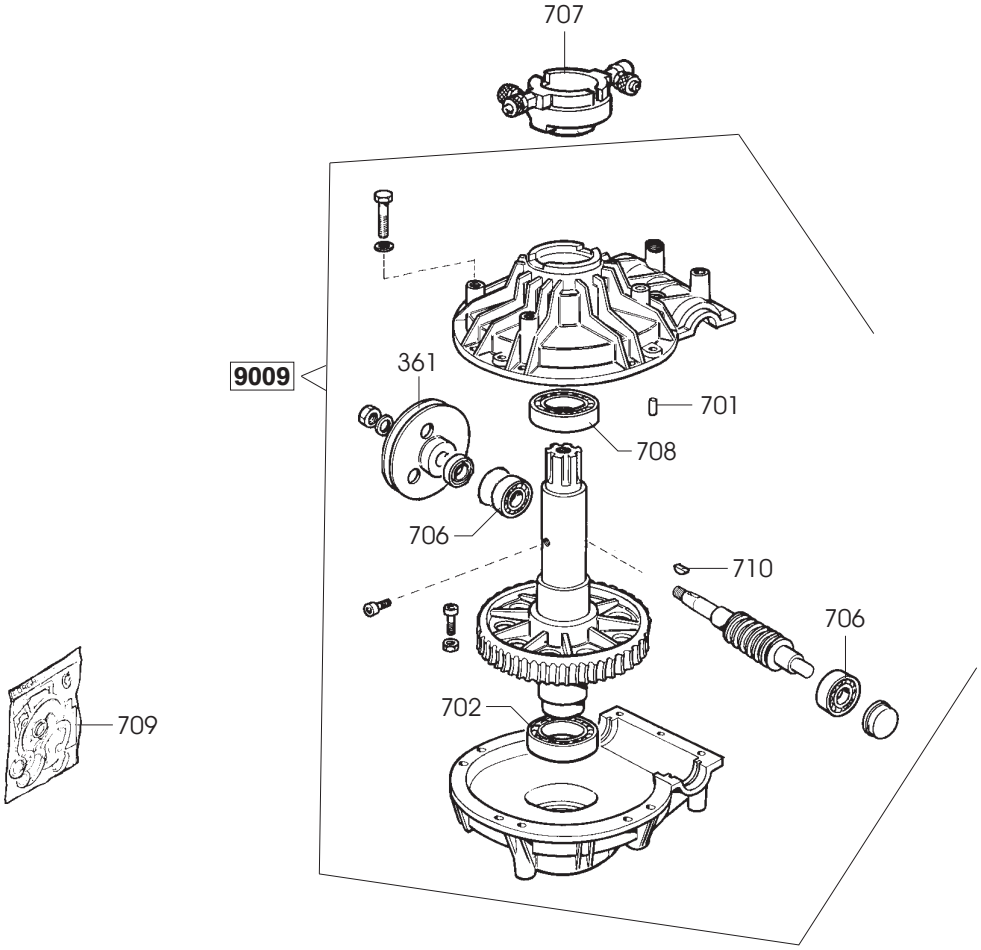

9009	**900233704**	**RIDUTTORE**	**GEAR BOX**	**GETRIEBE**	**REDUCTEUR**
9009	**900239555**	**RIDUTTORE pneum.**	**GEAR BOX air**	**GETRIEBE**	**REDUCTEUR**
9009	**900246020**	**RIDUTTORE DV**	**GEAR BOX**	**GETRIEBE**	**REDUCTEUR**
0361	900319073	PULEGGIA	PULLEY	RIEMENSCHEIBE	POULIE
0361	900414344	PULEGGIA (pneum.)	PULLEY (air)	RIEMENSCHEIBE	POULIE
0701	900601280	SPINA ELASTICA	PIN	SPANNSTIFT	CHEVILLE
0702	900601220	CUSCINETTO	BEARING	LAGER	ROULEMENT
0706	900601221	CUSCINETTO	BEARING	LAGER	ROULEMENt
0708	900601703	CUSCINETTO	BEARING	LAGER	ROULEMENT
0710	900601950	LINGUETTA	TANG	FEDERKEIL	LANGUETTE
0707	900228389	RACCORDO	CONNECTOR	ANSCHLUSS	RACCORD
0709	900238204	KIT GUARNIZIONI	SEALS KIT	DICHTUNGSATZ	KIT JOINTS

PANZITTA SALES & SERVICE
72 George Avenue
Wilkes-Barre, PA 18705
570-822-6720 800-822-6720
www.panzittasales.com

PANZITTA SALES & SERVICE
72 George Avenue
Wilkes-Barre, PA 18705
570-822-6720 800-822-6720
www.panzittasales.com

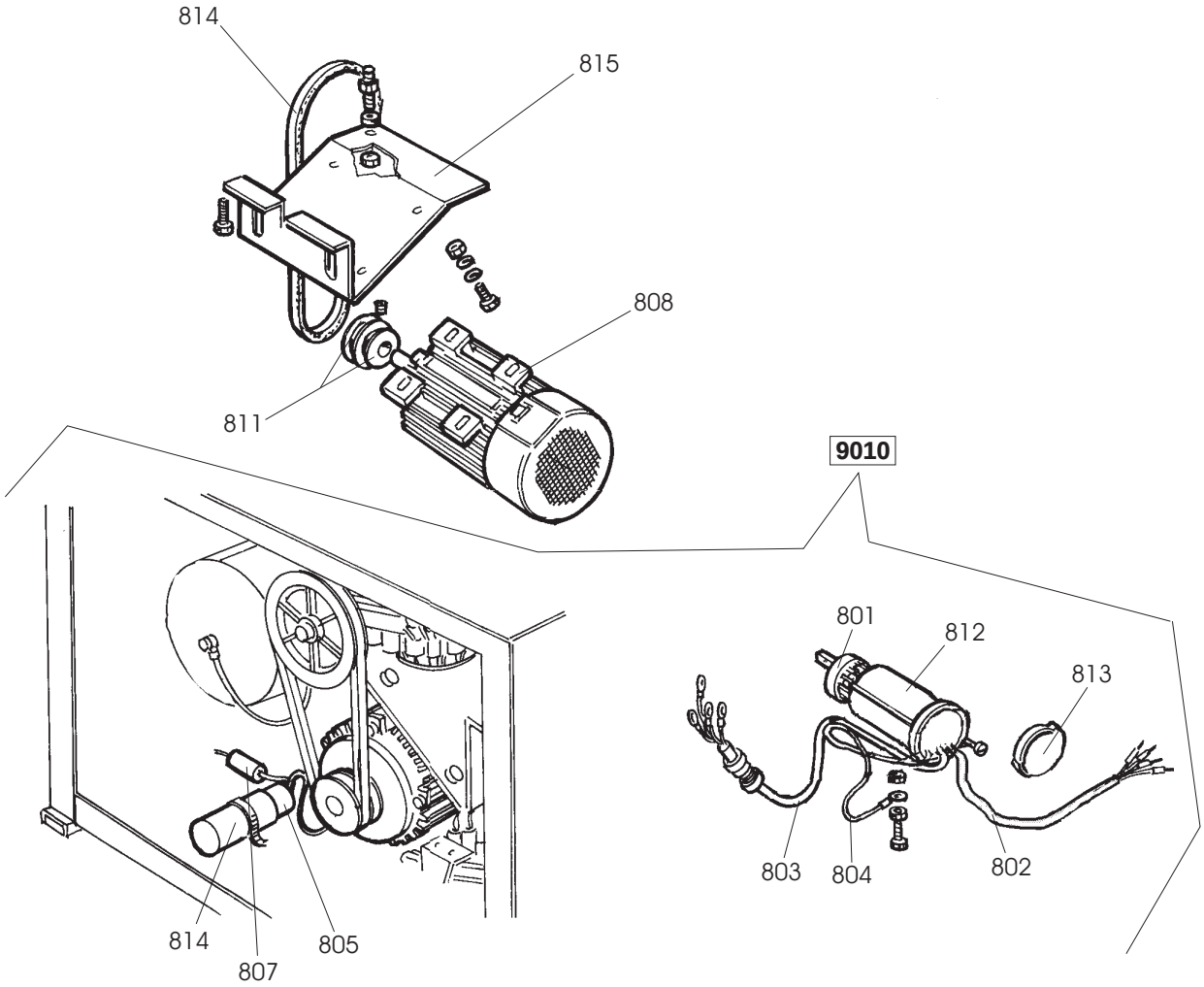

		IMPIANTO ELETTRICO	ELECTRIC SYSTEM	ELEKTRISCHE ANLAGE	INSTALL. ELECTRIQUE
9010	**900249882**	**110V 1ph**	**110V 1ph**	**110V 1ph**	**110V 1ph**
0801	900435363	INVERTITORE	REVERSER	RICHTUNGSWENDER	INVERSEUR
0802	900230709	CAVO	CABLE	KABEL	CABLE
0803	900225419	CAVO	CABLE	KABEL	CABLE
0804	900225051	CAVALLOTTO	U-BOLT	BUEGELBOLZEN	CRAMPILLON
0805	900430750	CAPPELLOTTO	CAP NUT	ABSCHLUSSKAPPE	CAPUCHON
0807	900430770	RESISTENZA	RESISTANCE	WIDERSTAND	RESISTANCE
0814	900449751	CONDENSATORE	CAPACITOR	KONDENSATOR	CONDENSATEUR
9010	**900249881**	**230V 1ph**	**230V 1ph**	**230V 1ph**	**230V 1ph**
0801	900421523	INVERTITORE	REVERSER	RICHTUNGSWENDER	INVERSEUR
0802	900235520	CAVO	CABLE	KABEL	CABLE
0803	900225419	CAVO	CABLE	KABEL	CABLE
0804	900225051	CAVALLOTTO	U-BOLT	BUEGELBOLZEN	CRAMPILLON
0805	900414850	CAPPELLOTTO	CAP NUT	ABSCHLUSSKAPPE	CAPUCHON
0807	900430770	RESISTENZA	RESISTANCE	WIDERSTAND	RESISTANCE
0814	900449750	CONDENSATORE	CAPACITOR	KONDENSATOR	CONDENSATEUR
9010	**900235574**	**3ph**	**3ph**	**3ph**	**3ph**
0801	900421523	INVERTITORE	REVERSER	RICHTUNGSWENDER	INVERSEUR
0802	900235518	CAVO	CABLE	KABEL	CABLE
0803	900225390	CAVO	CABLE	KABEL	CABLE
0804	900225051	CAVALLOTTO	U-BOLT	BUEGELBOLZEN	CRAMPILLON
		MOTORE	MOTOR	MOTOR	MOTEUR
0808	900422013	3ph 230/400V	3ph 230/400V	3ph 230/400V	3ph 230/400V
0808	900425397	3ph 240/440V	3ph 240/440V	3ph 240/440V	3ph 240/440V
0808	900449747	1ph 230V 50Hz	1ph 230V 50Hz	1ph 230V 50Hz	1ph 230V 50Hz
0808	900449748	1ph 230V 60Hz	1ph 230V 60Hz	1ph 230V 60Hz	1ph 230V 60Hz
0808	900449749	1ph 110V 60Hz	1ph 110V 60Hz	1ph 110V 60Hz	1ph 110V 60Hz
0811	900331067	PULEGGIA	PULLEY	RIEMENSCHEIBE	POULIE
0812	900432065	PROTEZIONE	SHIELD	ABDECKUNG	PROTECTION
0813	900430991	COPERCHIO	LID	DECKEL	COUVERCLE
0815	900334768	CULLA	CRADLE	WIEGE	BERCEAU
0816	900432009	CINGHIA	BELT	RIEMEN	COURROIE

PANZITTA SALES & SERVICE
72 George Avenue
Wilkes-Barre, PA 18705
570-822-6720 800-822-6720
www.panzittasales.com

PANZITTA SALES & SERVICE
72 George Avenue
Wilkes-Barre, PA 18705
570-822-6720 800-822-6720
www.panzittasales.com

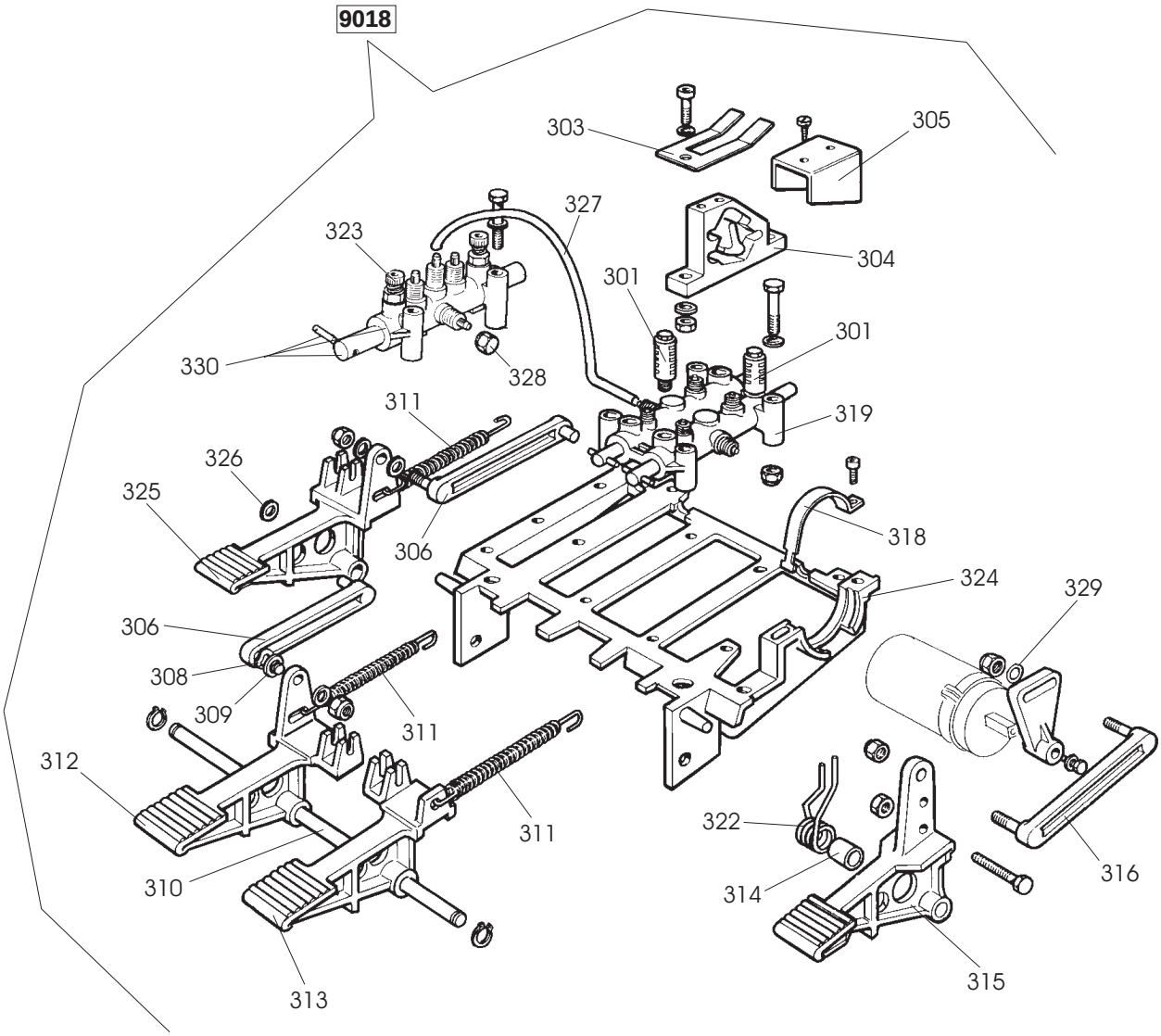

9018	900233678	PEDALIERA	CONTROL PEDAL	PEDALERIE	GR.PEDALES
0301	900422682	SILENZIATORE	SILENCER	SCHALLDAEMPFER	SILENCIEUX
0303	900325019	BALESTRA	LEAF SPRING	BLATTFEDER	RESSORT A LAMES
0304	900425020	CAMMA	CAM	NOCKEN	CAME
0305	900325018	CAVALLOTTO	U-BOLT	BUEGELBOLZEN	CRAMPILLON
0306	900425014	BIELLA	TRACE	PLEUELSTANGE	BIELLE
0308	900419888	RONDELLA	WASHER	UNTERLEGSCHEIBE	RONDELLE
0309	900309358	RONDELLA	WASHER	UNTERLEGSCHEIBE	RONDELLE
0310	900325005	PERNO	PIN	ZAPFEN	PIVOT
0311	900410628	MOLLA	SPRING	FEDER	RESSORT
0312	900325031	PEDALE	PEDAL	PEDAL	PEDALE
0313	900325032	PEDALE	PEDAL	PEDAL	PEDALE
0314	900325050	DISTANZIALE	SPACER	ABSTANDSSTUECK	ENTRETOISE
0315	900252010	PEDALE	PEDAL	PEDAL	PEDALE
0316	900425010	BIELLA	TRACE	PLEUELSTANGE	BIELLE
0317	900425027	LEVA	LEVER	HEBEL	LEVIER
0318	900332495	CAVALLOTTO	U-BOLT	BUEGELBOLZEN	CRAMPILLON
0319	900253298	RUBINETTO	COCK	HAHN	ROBINET
0321	900316199	GHIERA	NUT	NUTMUTTER	BAGUE
0322	900428682	MOLLA	SPRING	FEDER	RESSORT
0323	900433675	REGOLATORE	REGULATOR	REGLER	REGULATEUR
0324	900324273	SUPPORTO	SUPPORT	LAGER	SUPPORT
0325	900325030	PEDALE	PEDAL	PEDAL	PEDALE
0326	900452011	BOCCOLA	BUSHING	LAGER	DOUILLE
0327	900317610	TUBO	PIPE	ROHR	TUYAU
0328	900383173	TAPPO	PLUG	STOPFEN	BOUCHON
0330	900257137	RUBINETTO	COCK	HAHN	ROBINET

PANZITTA SALES & SERVICE
72 George Avenue
Wilkes-Barre, PA 18705
570-822-6720 800-822-6720
www.panzittasales.com

PANZITTA SALES & SERVICE
72 George Avenue
Wilkes-Barre, PA 18705
570-822-6720 800-822-6720
www.panzittasales.com

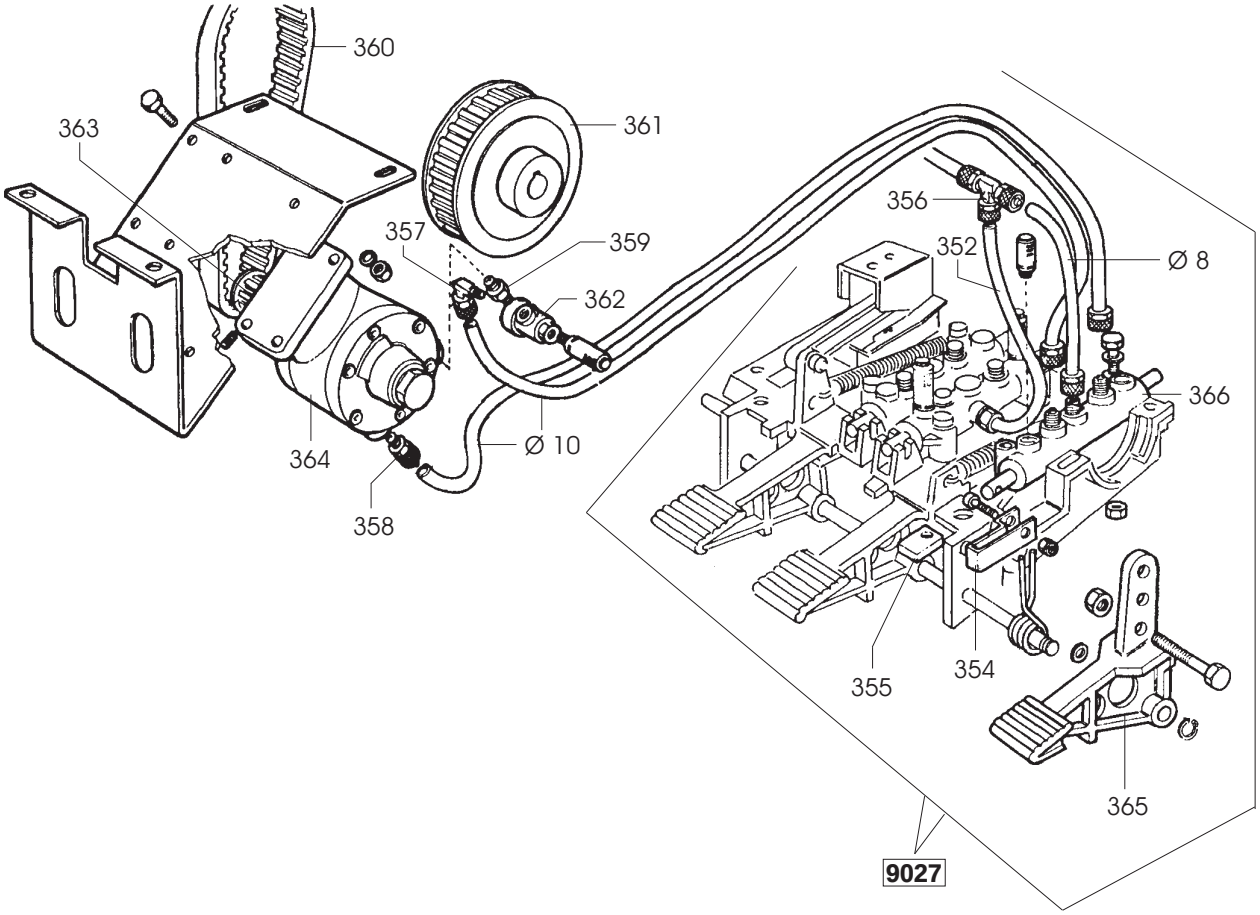

9027	900233677	PEDALIERA	CONTROL PEDAL	PEDALERIE	GR.PEDALES
Ø 8	900701683	TUBO	PIPE	ROHR	TUYAU
0352	900322705	TUBO	PIPE	ROHR	TUYAU
0354	900331381	BIELLA	TRACE	PLEUELSTANGE	BIELLE
0355	900329058	PIASTRINA	PLATE	PLAETTCHEN	PLAQUETTE
0356	900415860	RACCORDO	CONNECTOR	ANSCHLUSS	RACCORD
0365	900229957	PEDALE	PEDAL	PEDAL	PEDALE
0366	900258456	RUBINETTO	COCK	HAHN	ROBINET
0357	900418350	RACCORDO	CONNECTOR	ANSCHLUSS	RACCORD
0358	950419140	RACCORDO	CONNECTOR	ANSCHLUSS	RACCORD
0359	900419142	NIPPLO	CONNECTION	NIPPEL	NIPPLE
0360	900425238	CINGHIA	BELT	RIEMEN	COURROIE
0361	900319073	PULEGGIA	PULLEY	RIEMENSCHEIBE	POULIE
0361	900414344	PULEGGIA	PULLEY	RIEMENSCHEIBE	POULIE
0362	900419141	VALVOLA	VALVE	VENTIL	VANNE
0363	900319076	PULEGGIA	PULLEY	RIEMENSCHEIBE	POULIE
0364	900319135	MOTORE	MOTOR	MOTOR	MOTEUR
Ø 10	900701875	TUBO	PIPE	ROHR	TUYAU

PANZITTA SALES & SERVICE
72 George Avenue
Wilkes-Barre, PA 18705
570-822-6720 800-822-6720
www.panzittasales.com

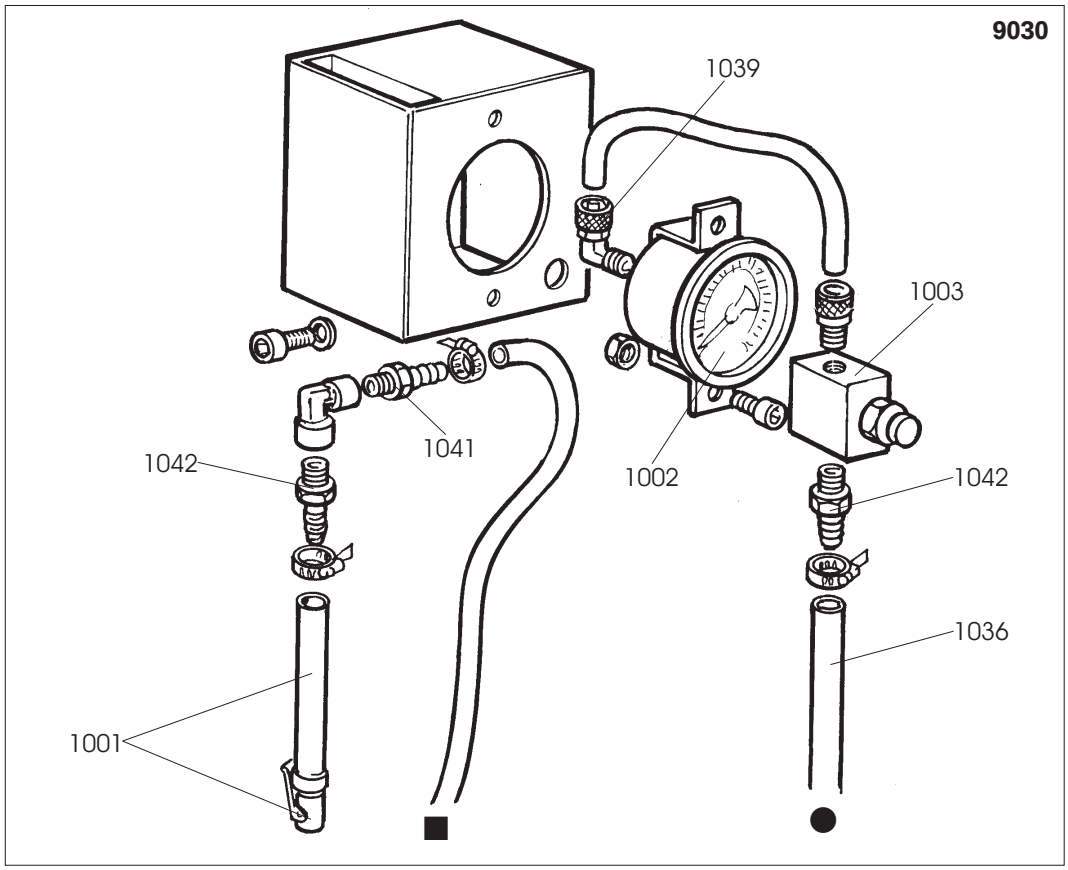

PANZITTA SALES & SERVICE
72 George Avenue
Wilkes-Barre, PA 18705
570-822-6720 800-822-6720
www.panzittasales.com

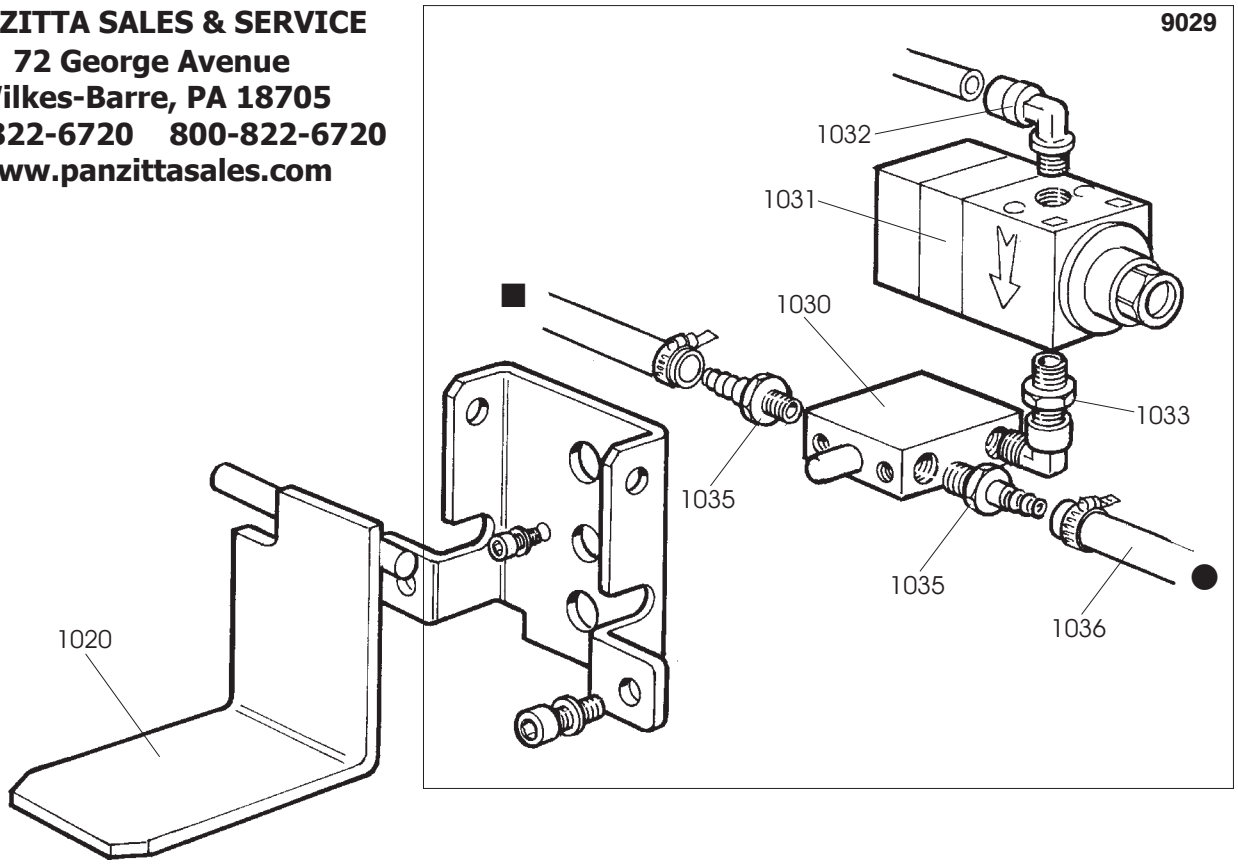

Ø 6	900701684	TUBO	PIPE	ROHR	TUYAU
Ø 8	900701683	TUBO	PIPE	ROHR	TUYAU
Ø 10	900701875	TUBO	PIPE	ROHR	TUYAU
1020	900234771	PEDALE	PEDAL	PEDAL	PEDALE
9029	**900252565**	**GRUPPO gonfiaggio**	**ASSEMBLY**	**GRUPPE**	**GROUPE**
1030	900452564	VALVOLA	VALVE	VENTIL	VANNE
1031	900452553	VALVOLA	VALVE	VENTIL	VANNE
1032	900450406	RACCORDO	CONNECTOR	ANSCHLUSS	RACCORD
1033	900418252	NIPPLO	CONNECTION	NIPPEL	NIPPLE
1035	900421137	INNESTO	CLUTCH	KUPPLUNG	EMBRAYAGE
1036	900352614	TUBO aria	PIPE	ROHR	TUYAU
9030	**900252599**	**SCATOLA - BAR/PSI**	**BOX - BAR/PSI**	**SCHACHTEL - BAR/PSI**	**BOITE - BAR/PSI**
9030	**900259565**	**SCATOLA - KPA**	**BOX - KPA**	**SCHACHTEL - KPA**	**BOITE - KPA**
1001	900235462	TUBO	PIPE	ROHR	TUYAU
		MANOMETRO	PRESSURE GAUGE	DRUCKMESSER	MANOMETRE
1002	900437831	BAR - PSI	BAR - PSI	BAR - PSI	BAR - PSI
1002	900457826	KPA	KPA	KPA	KPA
1003	900235463	VALVOLA	VALVE	VENTIL	VANNE
1036	900352614	TUBO aria	PIPE	ROHR	TUYAU
1039	900434180	RACCORDO	CONNECTOR	ANSCHLUSS	RACCORD
1042	900429536	INNESTO	CLUTCH	KUPPLUNG	EMBRAYAGE

PANZITTA SALES & SERVICE
72 George Avenue
Wilkes-Barre, PA 18705
570-822-6720 800-822-6720
www.panzittasales.com

PANZITTA SALES & SERVICE
72 George Avenue
Wilkes-Barre, PA 18705
570-822-6720 800-822-6720
www.panzittasales.com

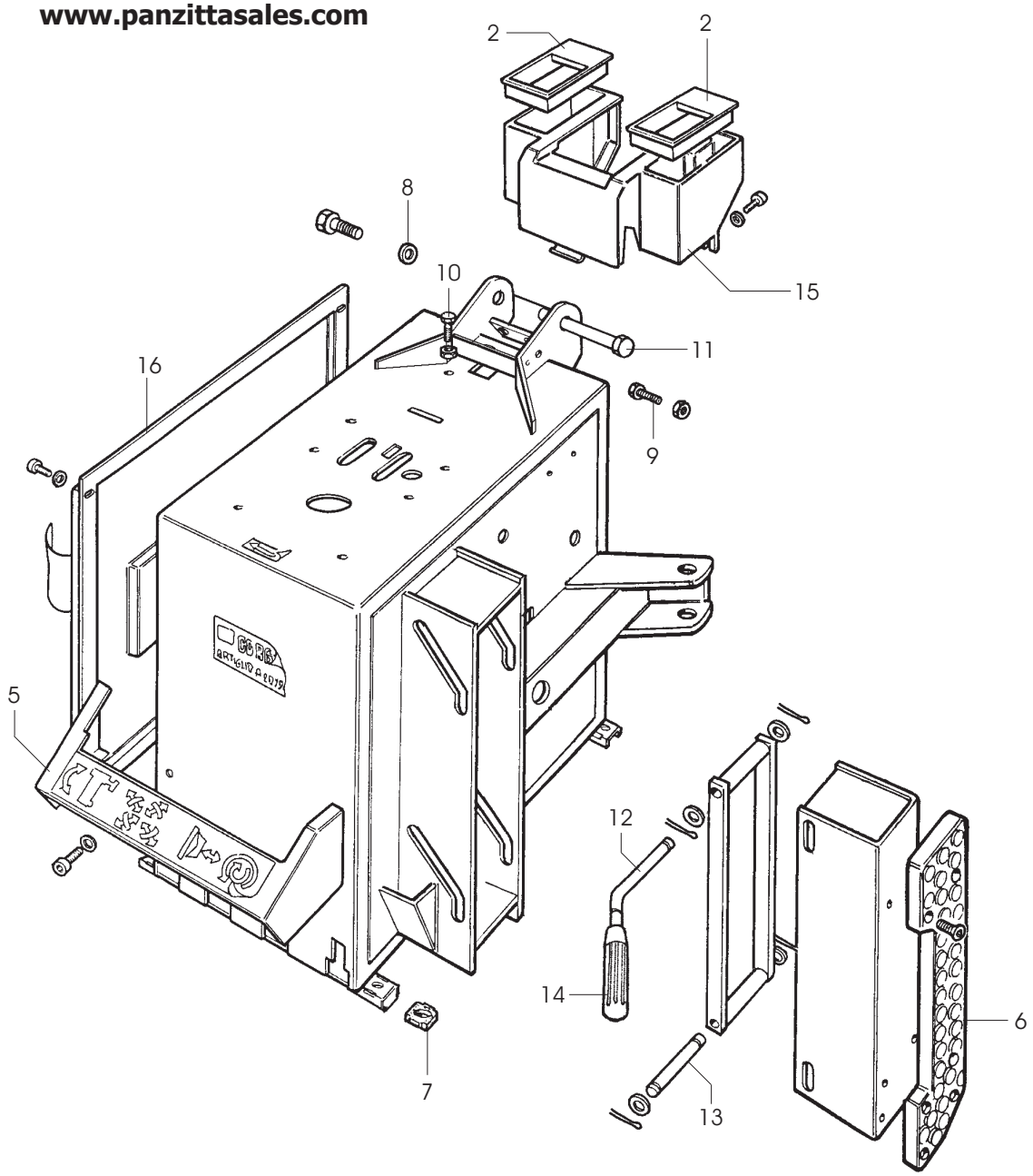

0002	900428845	COPERCHIO	LID	DECKEL	COUVERCLE
0005	900426768	PROTEZIONE	SHIELD	ABDECKUNG	PROTECTION
0006	900436199	APPOGGIO	RIM SUPPORT	STUETZE	APPUI
0007	900422019	PIEDE	FOOT	FUSS	PIED
0008	900318183	RONDELLA	WASHER	UNTERLEGSCHEIBE	RONDELLE
0009	900322348	VITE	SCREW	SCHRAUBE	VIS
0010	900320191	VITE	SCREW	SCHRAUBE	VIS
0011	900331055	PERNO	PIN	ZAPFEN	PIVOT
0012	900339456	PERNO	PIN	ZAPFEN	PIVOT
0013	900339046	PERNO	PIN	ZAPFEN	PIVOT
0014	900425219	MANOPOLA	KNOB	BALLENGRIFF	BOUTON
0015	900442121	PROTEZIONE	SHIELD	ABDECKUNG	PROTECTION
0016	900341176	COFANO	HOOD	HAUBE	COFFRE

PANZITTA SALES & SERVICE
72 George Avenue
Wilkes-Barre, PA 18705
570-822-6720 800-822-6720
www.panzittasales.com

PANZITTA SALES & SERVICE
72 George Avenue
Wilkes-Barre, PA 18705
570-822-6720 800-822-6720
www.panzittasales.com

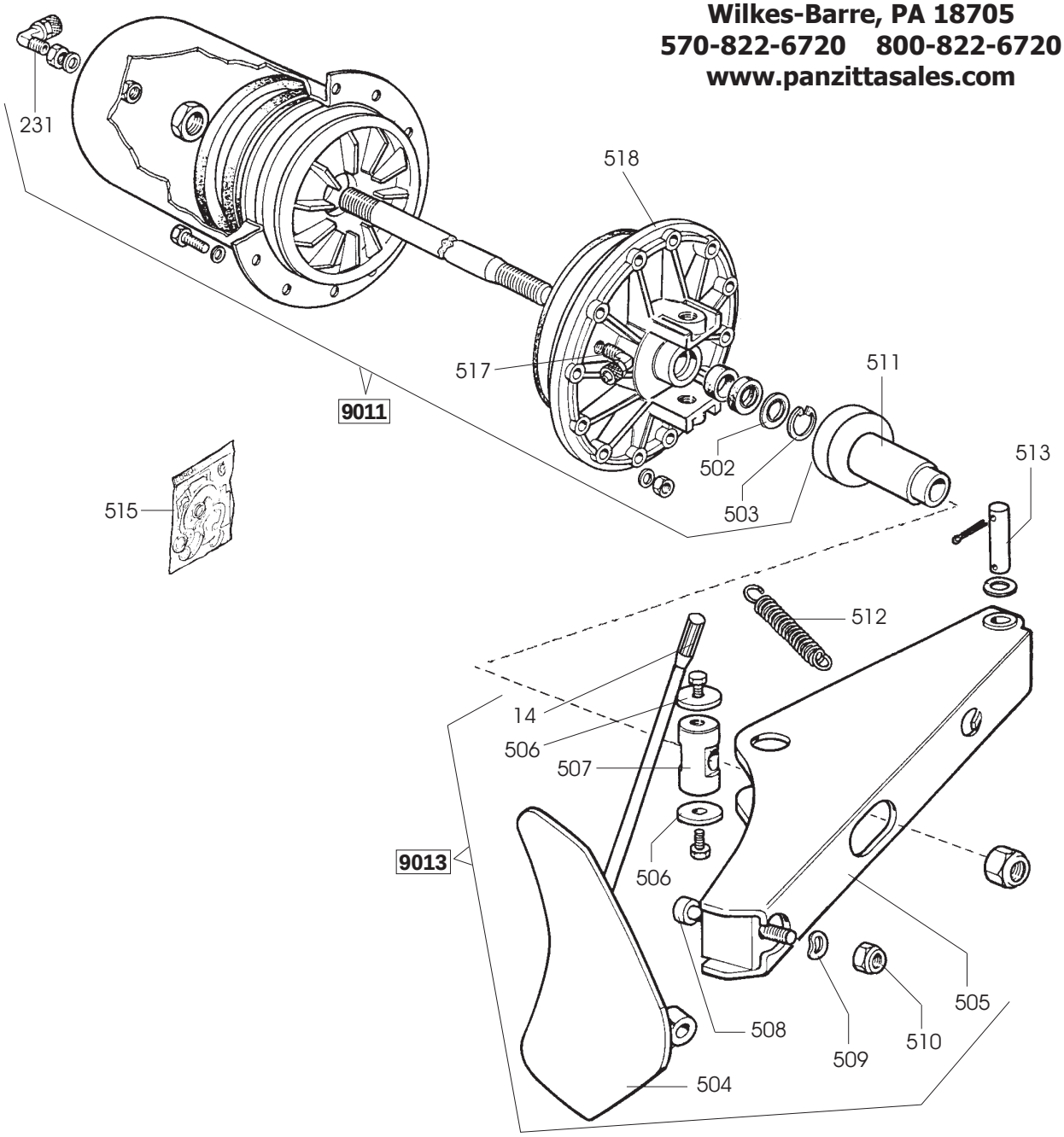

9011	**900239042**	**CILINDRO**	**CYLINDER**	**ZYLINDER**	**CYLINDRE**
0231	900441598	RACCORDO	CONNECTOR	ANSCHLUSS	RACCORD
0502	900325561	RONDELLA	WASHER	UNTERLEGSCHEIBE	RONDELLE
0503	900434031	ANELLO	RING	RING	ANNEAU
0517	900451926	RACCORDO	CONNECTOR	ANSCHLUSS	RACCORD
0518	900351905	FLANGIA	FLANGE	FLANSCH	FLASQUE

9013	**900249611**	**BRACCIO**	**ARM**	**ARM**	**BRAS**
0014	900425219	MANIGLIA	HANDLE	HANDGRIFF	POIGNEE
0504	900224000	PALETTA	BEAD BREAKER	SCHAUFEL	PELLE
0505	900224003	BRACCIO	ARM	ARM	BRAS
0506	950323901	RONDELLA	WASHER	UNTERLEGSCHEIBE	RONDELLE
0507	900339045	PERNO	PIN	ZAPFEN	PIVOT
0508	900324008	PERNO	PIN	ZAPFEN	PIVOT
0509	900409650	RONDELLA	WASHER	UNTERLEGSCHEIBE	RONDELLE
0510	900422255	DADO	NUT	MUTTER	ECROU

0511	900239061	TAMPONE	PAD	PUFFER	TAMPON
0512	900439105	MOLLA	SPRING	FEDER	RESSORT
0513	900323903	FULCRO	FULCRUM	DREHPUNKT	ENTABLURE
0515	900238212	KIT GUARNIZIONI	SEALS KIT	DICHTUNGSATZ	KIT JOINTS

PANZITTA SALES & SERVICE
72 George Avenue
Wilkes-Barre, PA 18705
570-822-6720 800-822-6720
www.panzittasales.com

PANZITTA SALES & SERVICE
72 George Avenue
Wilkes-Barre, PA 18705
570-822-6720 800-822-6720
www.panzittasales.com

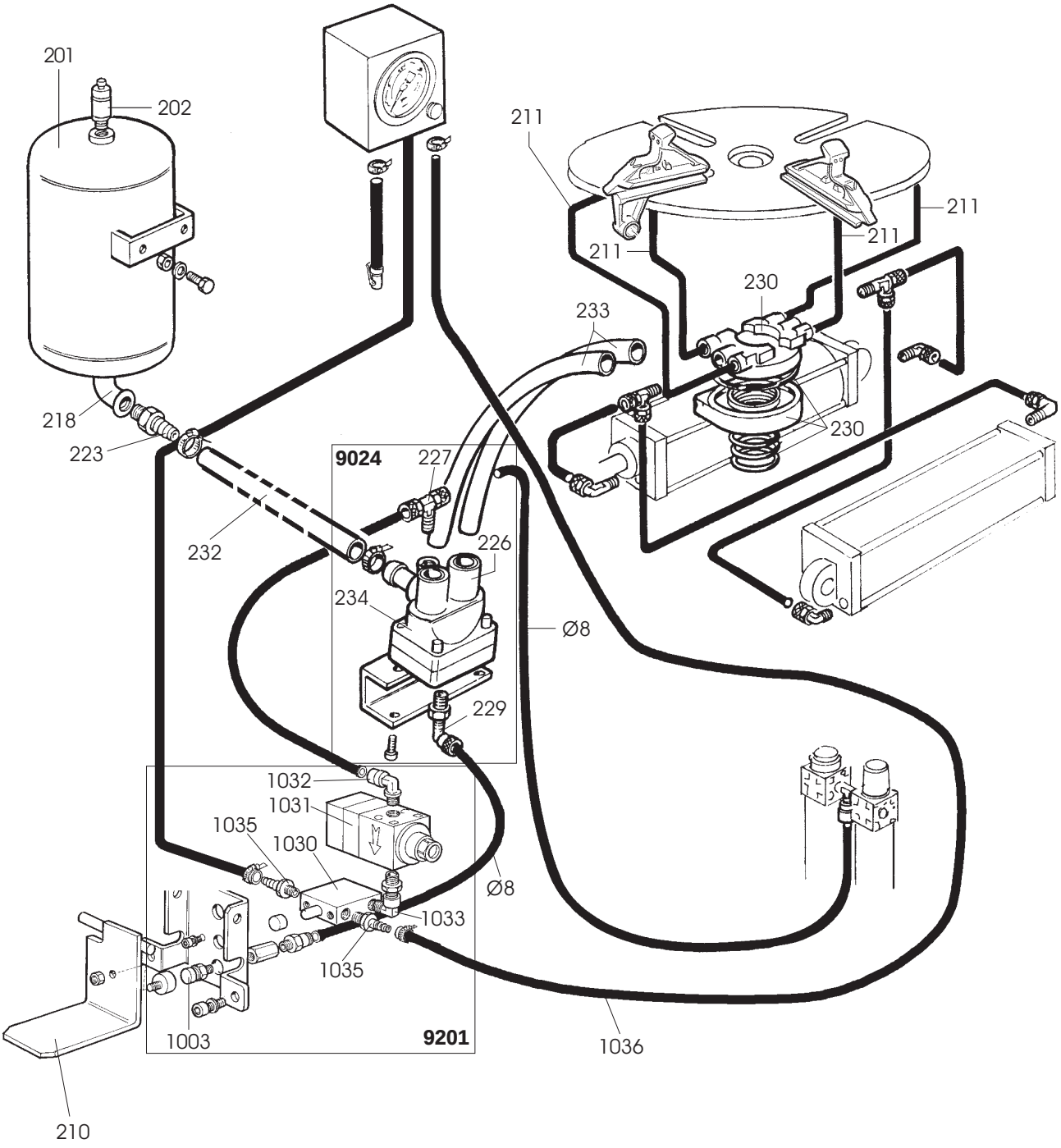

Ø 6	900701684	TUBO	PIPE	ROHR	TUYAU
Ø 8	900701683	TUBO	PIPE	ROHR	TUYAU
0201	900240968	SERBATOIO	TANK	TANK	RESERVOIR
0202	900435077	VALVOLA	VALVE	VENTIL	VANNE
0210	900238708	PEDALE	PEDAL	PEDAL	PEDALE
0211	900704223	TUBO	PIPE	ROHR	TUYAU
0218	900438995	RACCORDO	CONNECTOR	ANSCHLUSS	RACCORD
0223	900337704	RACCORDO	CONNECTOR	ANSCHLUSS	RACCORD
9024	**900242290**	**VALVOLA**	**VALVE**	**VENTIL**	**VANNE**
0226	900431993	CARTUCCIA	CARTRIDGE	EINSATZ	CARTOUCHE
0227	900438665	RACCORDO	CONNECTOR	ANSCHLUSS	RACCORD
0229	900441651	RACCORDO	CONNECTOR	ANSCHLUSS	RACCORD
0234	900243020	VALVOLA	VALVE	VENTIL	VANNE
0230	900241841	RACCORDO	CONNECTOR	ANSCHLUSS	RACCORD
0232	900342288	TUBO	PIPE	ROHR	TUYAU
0233	900342289	TUBO	PIPE	ROHR	TUYAU
9201	**900252568**	**GRUPPO gonfiaggio**	**ASSEMBLY**	**GRUPPE**	**GROUPE**
1003	900235463	VALVOLA	VALVE	VENTIL	VANNE
1030	900452564	VALVOLA	VALVE	VENTIL	VANNE
1031	900452553	VALVOLA	VALVE	VENTIL	VANNE
1032	900450406	RACCORDO	CONNECTOR	ANSCHLUSS	RACCORD
1033	900418252	NIPPLO	CONNECTION	NIPPEL	NIPPLE
1035	900421137	INNESTO	CLUTCH	KUPPLUNG	EMBRAYAGE
1036	900352614	TUBO aria	PIPE	ROHR	TUYAU

PANZITTA SALES & SERVICE
72 George Avenue
Wilkes-Barre, PA 18705
570-822-6720 800-822-6720
www.panzittasales.com

PANZITTA SALES & SERVICE
72 George Avenue
Wilkes-Barre, PA 18705
570-822-6720 800-822-6720
www.panzittasales.com

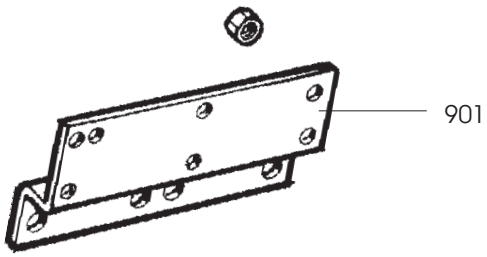

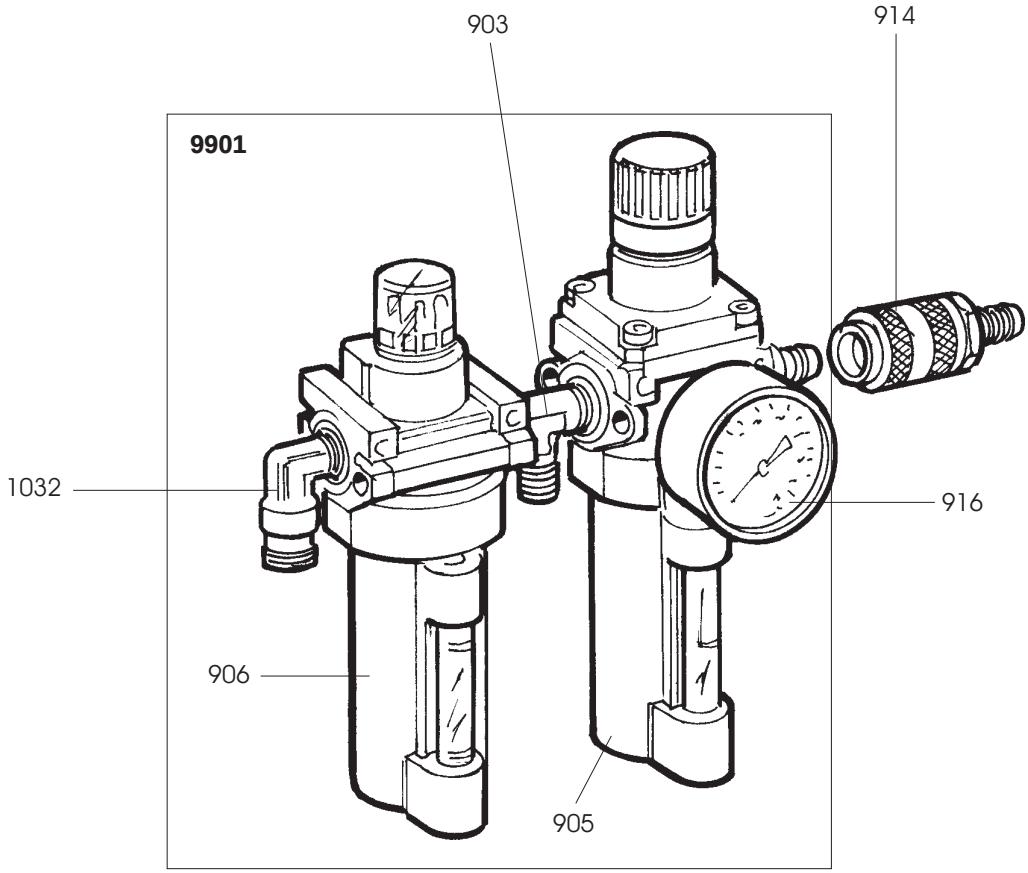

0901	900335695	STAFFA	BRACKET	KLAUE	ETRIER
0903	900433873	RACCORDO	CONNECTOR	ANSCHLUSS	RACCORD
9901	**900441901**	**FILTRO**	**FILTER**	**FILTER**	**FILTRE**
0905	900439376	BICCHIERE	BOWL	GLAS	BOL
0906	900439377	BICCHIERE	BOWL	GLAS	BOL
0914	900441899	GIUNTO	CUOPLING	KUPPLUNG	ACCOUPLEMENT
0916	900434818	MANOMETRO	PRESSURE GAUGE	DRUCKMESSER	MANOMETRE
1032	900450406	RACCORDO	CONNECTOR	ANSCHLUSS	RACCORD

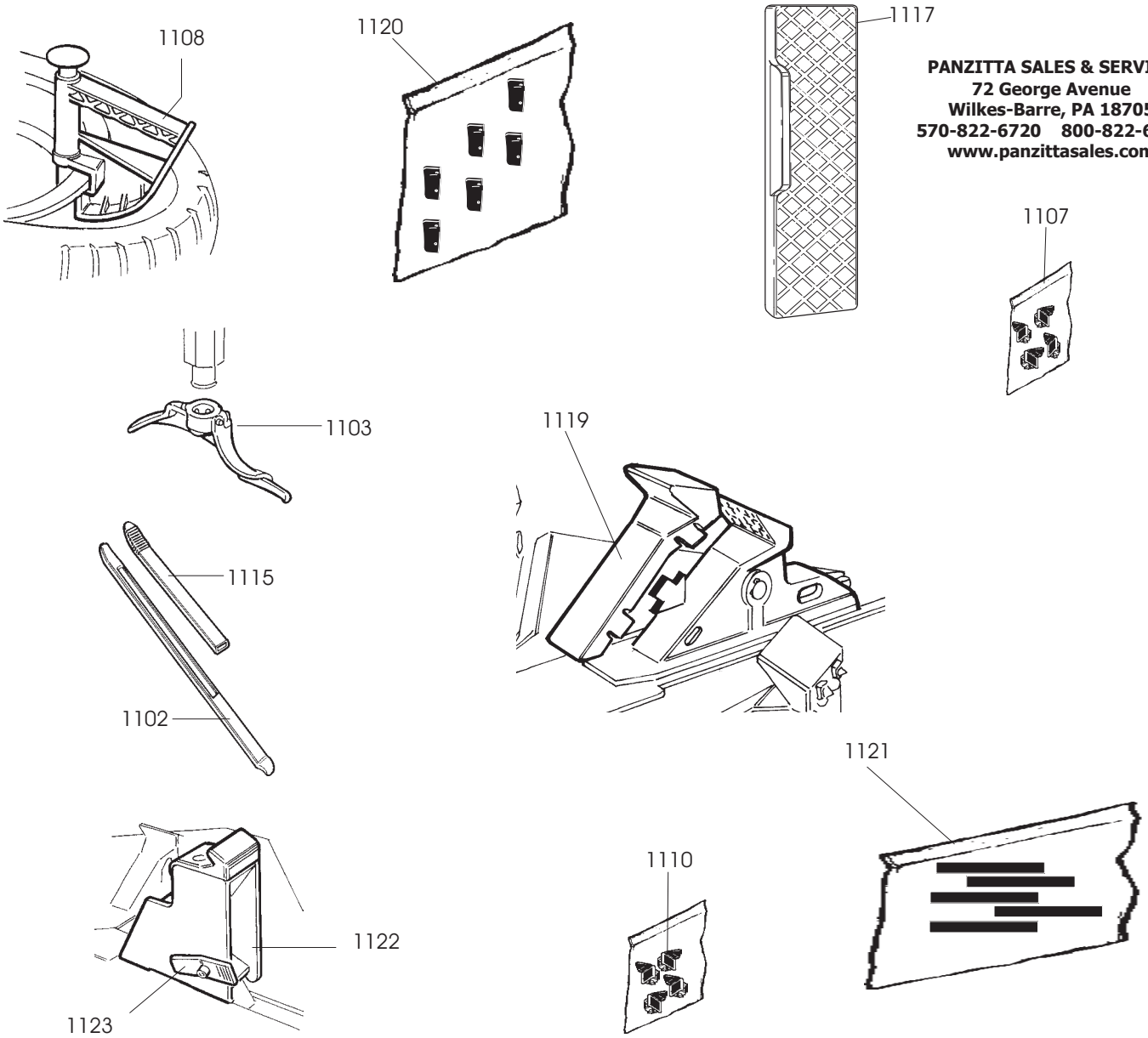

PANZITTA SALES & SERVICE
72 George Avenue
Wilkes-Barre, PA 18705
570-822-6720 800-822-6720
www.panzittasales.com

1103	900228563	TORRETTA	HEAD	DREHKOPF	TOUREL
1107	801242613	INSERTO	INSERT	EINLAGE	INSERT
1108	801435685	PINZA	PLIERS	ZANGE	PINCE
1110	801254342	PROTEZIONE	SHIELD	ABDECKUNG	PROTECTION
1102	900444238	LEVA	LEVER	HEBEL	LEVIER
1115	801246241	PROTEZIONE	SHIELD	ABDECKUNG	PROTECTION
1117	801458663	PROTEZIONE	SHIELD	ABDECKUNG	PROTECTION
1119	801254343	PROTEZIONE	SHIELD	ABDECKUNG	PROTECTION
1120	801258383	PROTEZIONE	SHIELD	ABDECKUNG	PROTECTION
1121	801258898	INSERTO	INSERT	EINLAGE	INSERT
1122	801258650	ATTACCO	ADAPTOR	HALTERUNG	ATTAQUE
1123	900426746	CRICCHETTO	CRICK	SPERRKLINKE	CLIQUET

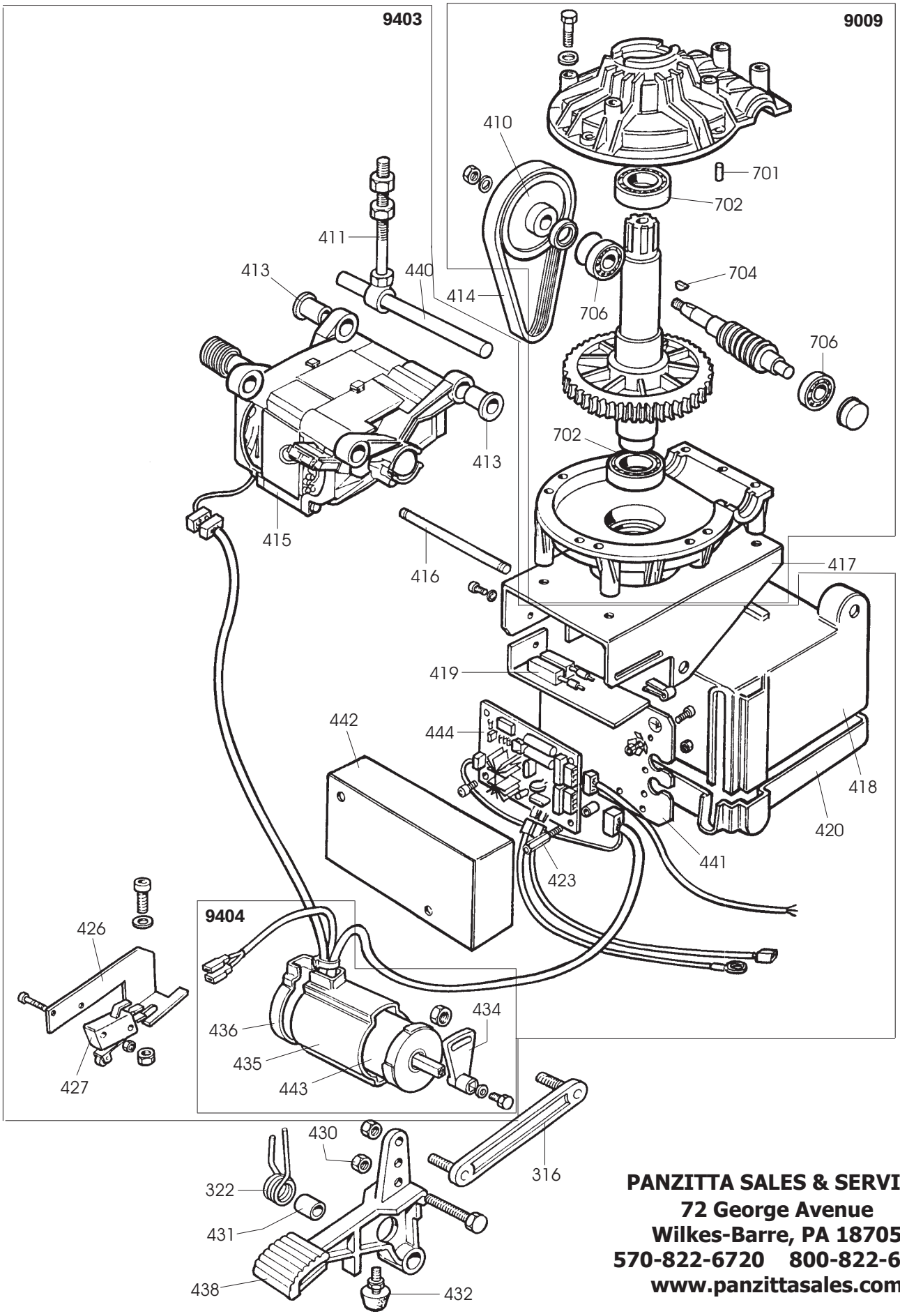

PANZITTA SALES & SERVICE
72 George Avenue
Wilkes-Barre, PA 18705
570-822-6720 800-822-6720
www.panzittasales.com

9403	**900246307**	**IMPIANTO EL..230V.**	**EL.SYSTEM**	**ELEKTRISCHE ANLAGE**	**ISTALL.ELECTRIQUE**
9403	**900250087**	**IMPIANTO EL..110V.**	**EL.SYSTEM**	**ELEKTRISCHE ANLAGE**	**ISTALL.ELECTRIQUE**
0316	900425010	BIELLA	TRACE	PLEUELSTANGE	BIELLE
0322	900428682	MOLLA	SPRING	FEDER	RESSORT
0410	900339870	PULEGGIA	PULLEY	RIEMENSCHEIBE	POULIE
0411	900246010	TIRANTE	STAY ROD	ZUGSTANGE	TIRANT
0413	900340365	BOCCOLA	BUSHING	LAGER	DOUILLE
0414	900440571	CINGHIA	BELT	RIEMEN	COURROIE
0415	900251870	MOTORE	MOTOR	MOTOR	MOTEUR
0416	900346012	PERNO	PIN	ZAPFEN	PIVOT
0417	900346017	SUPPORTO	SUPPORT	LAGER	SUPPORT
0418	900446016	COPERCHIO	LID	DECKEL	COUVERCLE
0419	900246303	RESISTENZA	RESISTANCE	WIDERSTAND	RESISTANCE
0420	900446013	COPERCHIO	LID	DECKEL	COUVERCLE
0423	900446033	COLONNETTA	STUD	SCHRAUBENBOLZEN	COLONNETTE
0426	900346011	SUPPORTO	SUPPORT	LAGER	SUPPORT
0427	950413654	MICROINTERRUTT.	MICROSWITCH	MIKROSCHALTER	MICROINTERRUPT.
0430	900346008	BOCCOLA	BUSHING	LAGER	DOUILLE
0431	900325050	DISTANZIALE	SPACER	ABSTANDSSTUECK	ENTRETOISE
0432	900430496	ANTIVIBRANTE	VIBRAT.DAMPER	SCHWINGUNGSDAEMPFER	ANTI-VIBRATION
0438	900352026	PEDALE	PEDAL	PEDAL	PEDALE
0440	900340367	PERNO	PIN	ZAPFEN	PIVOT
0441	900349299	SUPPORTO	SUPPORT	LAGER	SUPPORT
0442	900449300	COPERCHIO	LID	DECKEL	COUVERCLE
0444	900457434	SCHEDA ELETTR.	P.C.BOARD	ELEKTR.PLATINE	FICHE ELECTR.
9404	**900257433**	**CAVO**	**CABLE**	**KABEL**	**CABLE**
0434	900425027	LEVA	LEVER	HEBEL	LEVIER
0435	900432065	PROTEZIONE	SHIELD	ABDECKUNG	PROTECTION
0436	900430991	COPERCHIO	LID	DECKEL	COUVERCLE
0443	900457432	INVERTITORE	REVERSER	RICHTUNGSWENDER	INVERSEUR

9009	**900246020**	**RIDUTTORE**	**GEAR BOX**	**GETRIEBE**	**REDUCTEUR**
0701	900601280	SPINA ELASTICA	PIN	SPANNSTIFT	CHEVILLE
0702	900601220	CUSCINETTO	BEARING	LAGER	ROULEMENT
0704	900600667	LINGUETTA	TANG	FEDERKEIL	LANGUETTE
0706	900601221	CUSCINETTO	BEARING	LAGER	ROULEMENT

PANZITTA SALES & SERVICE
72 George Avenue
Wilkes-Barre, PA 18705
570-822-6720 800-822-6720
www.panzittasales.com