Accu·turn®
A TURN FOR THE BETTER

EN

ES

CE

PANZITTA SALES & SERVICE
72 George Avenue
Wilkes-Barre, PA 18705
570-822-6720 800-822-6720
www.panzittasales.com

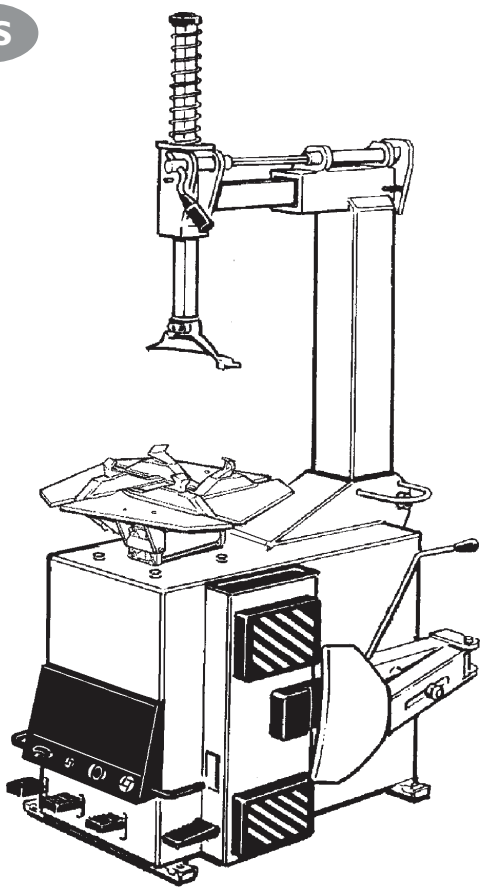

TIRE CHANGING MACHINE
DESMONTA-NEUMATICOS

526T

COD.103933 Rev.1

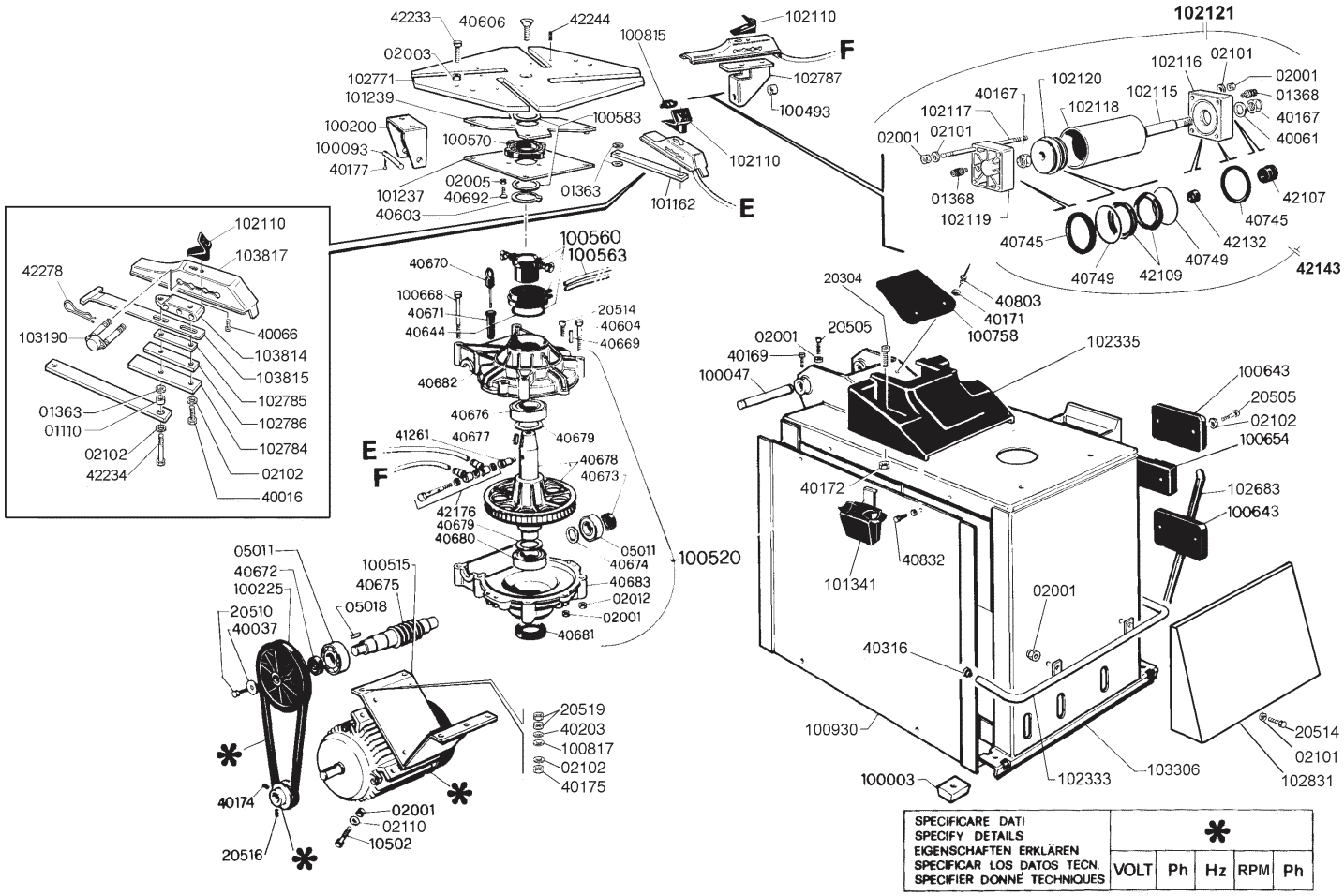

PANZITTA SALES & SERVICE
72 George Avenue
Wilkes-Barre, PA 18705
570-822-6720 800-822-6720
www.panzittasales.com

01110	CLAMP CONTROL ROD BUSHING
01363	30X17X0,3 WASHER
01368	1510 1/8 6X4 JOINT
02001	NUT MA 8 934 5588
02003	LOW LOCKNUT M8 UNI 7474
02005	NUT MA 8 936 5589
02012	NUT MA 10 934 5588
02101	CHANFERED WASHER 8 125 UNI 6592
02102	CHANFERED WASHER 10 125 UNI 6592
02110	CHAMFERED WASHER 8X24X1,5
05011	BEARING 30205
05018	6X6X25 TAB
100003	RUBBER FOOT
100047	TILTING POLE FULCRUM PIN
100093	HINGE PIN
100200	CYLINDER BEARING
100225	NYLON GEAR PULLEY
100493	SELF CENTERING BEARING SPACER
100515	MOTOR MOUNTING
100520	COMPLETE GEAR FOR TUBELESS CONNECTION
100560	ROTATING COLLECTOR SET
100563	6X4 L.700 AIR TUBE
100570	CONTROL PLATE BUSHING
100583	85X70X0,5 WASHER
100643	BEAD BREAKER BEARING
100654	BACK BEAD BREAKER BEARING
100668	M10X180 SCREW
100758	RUBBER PROTECTION
100815	19" WEDGE CAP
100817	RUBBER SHOCK ABSORBER
100930	SIDE COVER
101162	SEE P/N 102809 (2 PIECES)
101237	INFERIOR PLATE FOR 20" SELF CENTERING
101239	UPPER PLATE FOR 20" SELF CENTERING CHUCK
101341	GREASE BEARING KIT
102110	EUROCARGO WEDGE
102115	CYLINDER ROD DIAM.75 20"
102116	ALUMINIUM FRONT HEAD DIAM.75
102117	STAY BOLT CYLINDER DIAM. 75 20"
102118	CYLINDER CHAMBER DIAM.75 20"
102119	ALUMINIUM REAR HEAD DIAM.75
102120	CYLINDER PISTON DIAM.75
102121	CYLINDER DIAM.75 20"
102333	PEDAL COVERING TUBE
102335	BASE COVER FOR FALCO/GRIFONE POLE
102683	FLAT BEAD LIFTING LEVER
102771	26" SQUARE CHUCK
102784	LOWER CLAMP GUIDE
102785	LOWER CLAMP GUIDE
102786	HIGHER CLAMP GUIDE
102787	GUIDE WITH SUPPORT
102831	PEDAL COVER
103190	COMPLETE CUTOFF FORK
103306	BODY-BOX
103814	IT CLAMP POSITINING SUPPORT
103815	SLOT CLOSING TABLE
103817	IT CLAMP + CONNECTOR
10502	8X25 SCREW UNI 5739
20304	5X30 INNER HEX.HEAD
20505	8X16 INNER HEX.HEAD
20510	8X20 SCREW UNI 5933
20514	8X30 SCREW UNI 5739
20516	6X10 SCREW
20519	NUT MA10 936 5589
40016	10X40 SCREW
40037	FLAT WASHER 8,5X32X3
40061	CHAMFERED WASHER SIZE 16 125 UNI 6592
40066	10X25 SCREW
40167	16X1,5 LOCKNUT
40169	INNER HEX. HEAD 8X10
40171	FLAT WASHER 5X16X1,6
40172	GROWER SIZE 5
40174	COUNTER HEAD SCREW 6X8
40175	LOCKNUT MA 10 985 7474
40177	COTTER PIN 1,5X15
40203	WASHER 10X40X2,5
40316	PEDAL PROTECTION COVER
40603	SHAFT OUTER SEEGER SIZE 70
40604	M10X150 SCREW
40606	M16X40 SCREW
40644	OR 3237
40669	CYLINDER PLUG
40670	LEVEL CAP
40671	CAP EXTENSION
40672	SEALING RING
40673	CLOSURE CAP 37X5
40674	ADJUST. SHIM 25,6 X 35,3
40675	WORM
40676	BEARING 6010
40677	12X8X40 TAB
40678	CROWN SHAFT
40679	ADJ. SHIM 50,3X70,3
40680	6010 BEARING
40681	BARING 50X72X8
40682	OPEN UPPER BOX
40683	OPEN LOWER BOX
40692	8X25 SCREW
40745	OR RING 842
40749	OR RING 6187
40803	ALLUMINIUM RIVET 4X16
40832	SELF THREADED NUT 6,3X13
41261	UNION ATR 2525
42107	BIDIRECTIONAL WASHER WITH COUPLER
42109	LIP GASKET DE 300
42132	ROD GUIDE RING
42143	GASKET KIT FOR SELF CENT. CHUCK ALU HEAD
42176	CYLINDER CONNECTION (COD.41264+41265X2)
42233	SCREW M8X30
42234	TE UNI 5737 MA10X 55 8.8 PG PF BRT
42244	ELASTIC PIN UNI 6873 5X20
42278	SPLIT "R" DIAM. 2 LENGHT 53MM

PANZITTA SALES & SERVICE
72 George Avenue
Wilkes-Barre, PA 18705
570-822-6720 800-822-6720
www.panzittasales.com

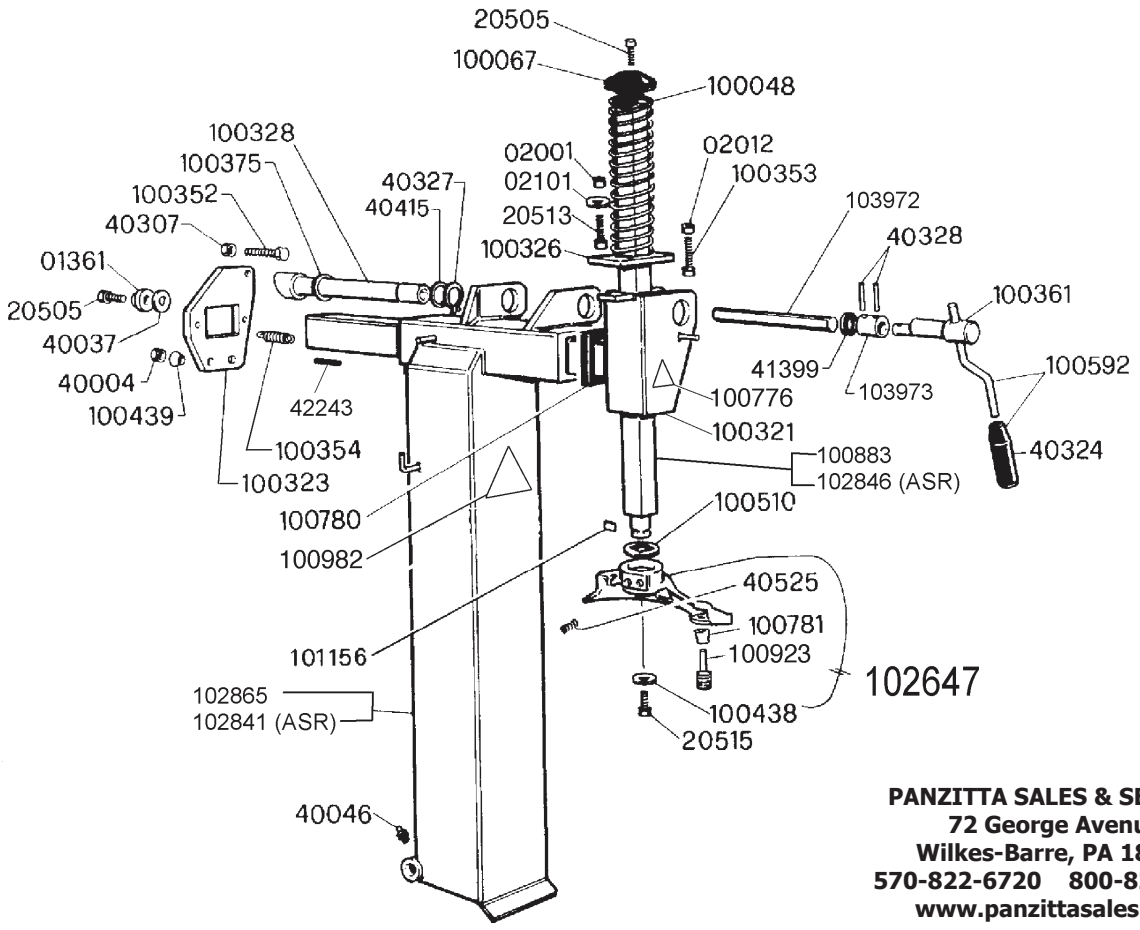

PANZITTA SALES & SERVICE
72 George Avenue
Wilkes-Barre, PA 18705
570-822-6720 800-822-6720
www.panzittasales.com

01361	STOP WASHER
02001	NUT MA 8 934 5588
02012	NUT MA 10 934 5588
02101	WASHER BIS. UNI 6592 8 ZNT B.
100048	VERTICAL ARM RETURN SPRING
100067	SPRING PRESSURE CAP
100321	ARM
100323	HORIZONTAL LOCKING PLATE
100326	VERTICAL LOCKING PLATE
100328	HORIZONTAL LOCKING CAM
100352	HORIZONTAL LOCKING REGISTER SCREW
100353	VERTICAL LOCKING REGISTER SCREW
100354	LOCKING RETURN SPRING
100361	GRIFONE LOCKING CONTROL SET
100375	40X30X0,3 WASHER
100438	10,5X36X4 FLAT WASHER
100439	CONIC WASHER
100510	PLASTIC ANTISHOCK RING
100592	CONTROL LEVER GROUP FOR GRIFONE BLOCKING
100776	STICK-ON LABEL
100780	SLIDING ARM PROTECTION PANEL
100781	COMPLETE TOWER SMALL ROLLER
100883	GRIFONE VERTICAL ROD
100923	SPECIAL SCREW FOR TOWER
100982	STICK-ON LABEL
101156	TOWER STIFFENING SHIM
102647	SHORT TOWER SET GROUP
102841	ASR POLE
102846	VERTICAL ROD
102865	POLE
103972	LOCKING HEX.
103973	COUPLING BUSHING
20505	8X16 INNER HEX.HEAD
20513	8X30 INNER HEX.HEAD
20515	10X30 SCREW UNI 5739
40004	MA 12 936 5589 NUT
40037	FLAT WASHER 8,5X32X3
40046	GREASER
40307	NUT MA 14 936 5589
40324	LOCKING CONTROL HANDLE
40327	SEEGER SIZE 30 471 UNI 7435
40328	STIFFENED SPRING COTTER
40415	WASHER 30,5X46X0,7
40525	HEADLESS SCREW
41399	RUBBER RING
42243	M12x40 UNI5911 STUD

PANZITTA SALES & SERVICE
72 George Avenue
Wilkes-Barre, PA 18705
570-822-6720 800-822-6720
www.panzittasales.com

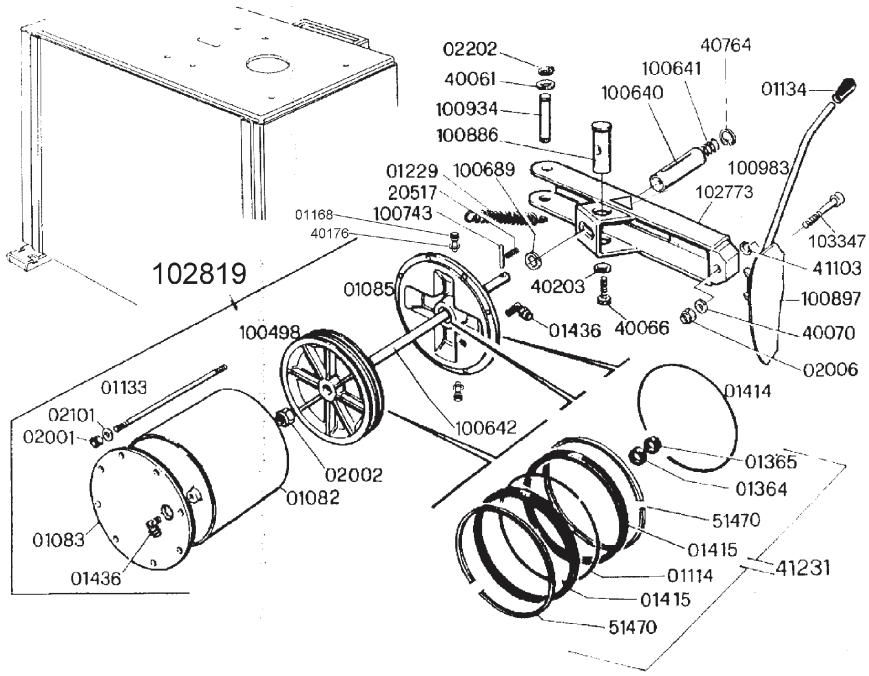

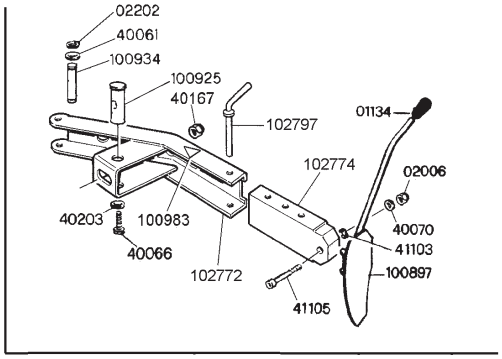

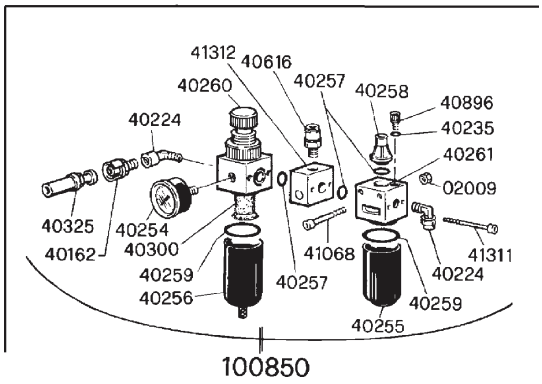

PANZITTA SALES & SERVICE
72 George Avenue
Wilkes-Barre, PA 18705
570-822-6720 800-822-6720
www.panzittasales.com

01082	BEAD BREAKER CYLINDER CHAMBER
01083	BEAD LOOSENER CYLINDER REAR FLANGE
01085	BEAD LOOSENER CYLINDER FRONT FLANGE
01114	BEAD BREAKER PISTON-RING
01133	BEAD BREAKER TIE ROD
01134	HANDLE FOR PIN SIZE 12
01229	BEAD BREAKING ARM RETURN SPRING
01364	LIP GASKET SIZE 18
01365	GASKET CLAMPING RING 18
01414	OR GASKET 180X2
01415	LIP GASKET SIZE 184
01436	"L" SHAPED CONN. 1500 6X8 1/8
0168	AIR HOSE 8X6 L.60
02001	NUT MA 8 934 5588
02002	LOCKNUT MA 14 982 7473
02006	LOCKNUT M12
02101	WASHER BIS. UNI 6592 8 ZNT B.
02202	SEEGER 16
100498	BEAD BREAKER CYL. PISTON
100640	TALESCOPE
100641	TELESCOPE SPRING
100642	RACING BEAD BREAKER CYLINDER ROD
100689	SHOCKPROOF WASHER
100743	BEAD BREAKER CYLINDER ROD SPRING
100886	RACING PIN FOR SWIVEL JOINT
100897	BEAD BREAKER TOOL
100925	PIN FOR SWIVEL JOINT
100934	BEAD BREAKER ARM PIN
100983	STICK-ON LABEL
102772	3 POSITIONS BEADBREAKER ARM
102773	FIXED BEADBREAKER ARM
102774	BRAKER ARM EXTRACTABLE PART
102797	COMPLETE CUTOFF PIN
102819	SCREWS RACING BEAD BREAKER CYLINDER
103347	SCREW FOR BEAD BREAKER BLADE
20517	6X10 SCREW
40061	CHAMFERED WASHER SIZE 16 125 UNI 6592
40066	10X25 SCREW
40070	CHAMFERED WASHER SIZE 12
40167	16X1,5 LOCKNUT
40176	TOOTHED WASHER SIZE 14
40203	WASHER 10X40X2,5
40764	INTERNAL RING DIM.22
41103	CORRUGATED SPRING WASHER DIN 137/B 12
41105	12X90 INNER HEX HEAD UNI 5931
41231	BEAD BREAKER CYLINDER GASKET SERIES
51470	BEAD BREAKER ANTITILTING RING

PANZITTA SALES & SERVICE
72 George Avenue
Wilkes-Barre, PA 18705
570-822-6720 800-822-6720
www.panzittasales.com

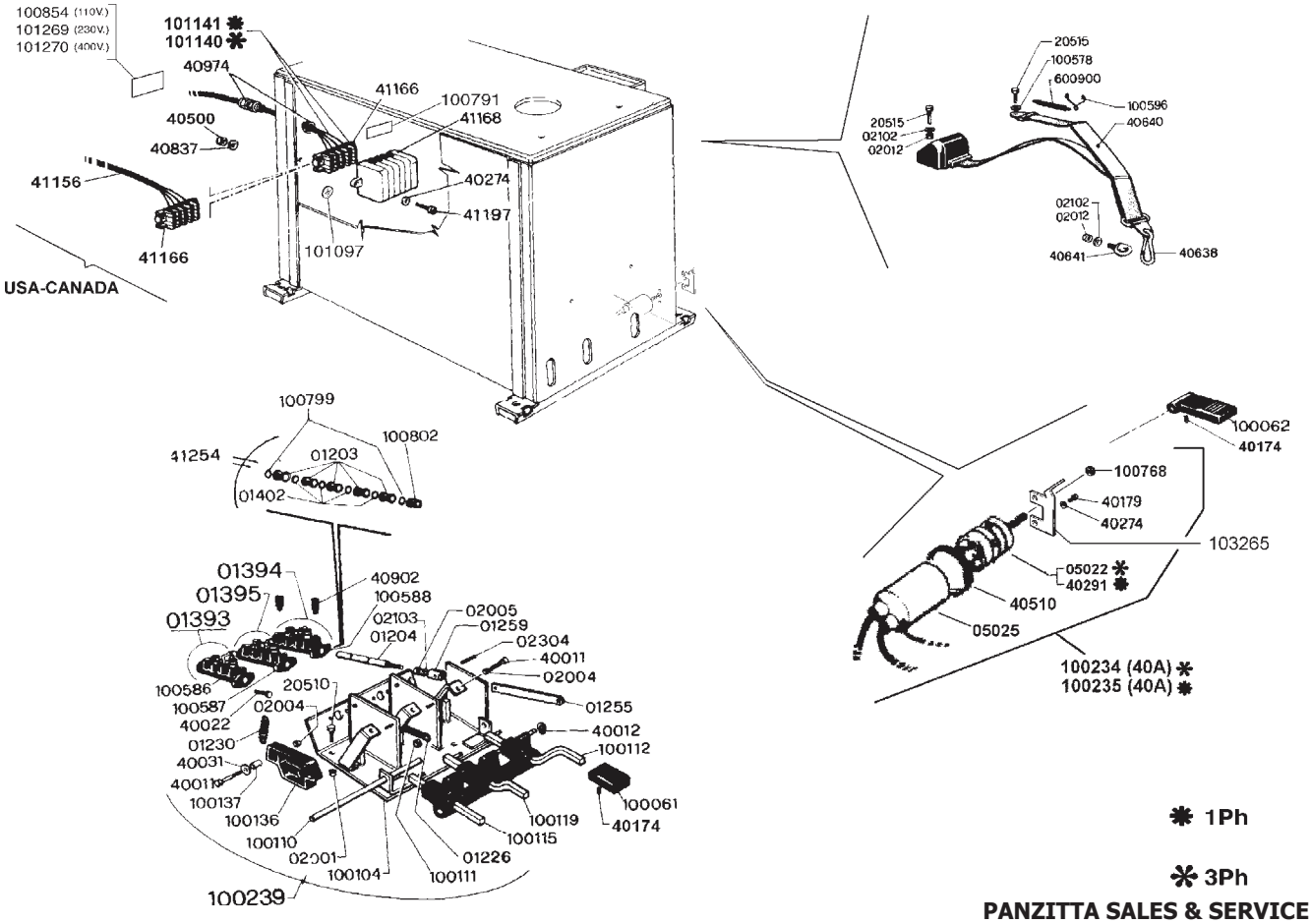

✱ 1Ph

✱ 3Ph

PANZITTA SALES & SERVICE
72 George Avenue
Wilkes-Barre, PA 18705
570-822-6720 800-822-6720
www.panzittasales.com

01203	OR SPACER
01204	COCK ROD
01226	PEDAL RETURN SPRING
01230	TRIGGER RETURN SPRING
01255	COCK ROD
01259	COCK ROD FORK
01393	TILTING POLE COCK
01394	BEAD BREAKER COCK
01395	SELF CENTERING COCK
01402	OR GASKET 16X8X4
02001	NUT MA 8 934 5588
02004	NUT MA 6 934 5588
02005	NUT MA 8 936 5589
02012	NUT MA 10 934 5588
02102	CHANFERED WASHER 10 125 UNI 6592
02103	TOOTHED WASHER SIZE 8
02304	SPRING COTTER 4X16 1481 UNI 6873
05022	THREE-PHASE INVERTER 279
05025	BREMAS PROTECTION COVER
100061	PEDAL
100062	INVERTER PEDAL
100104	PEDAL BODY
100110	PEDAL PIN
100111	NYLON SPACER
100112	BEAD LOOSENER CONTROL PEDAL
100115	TILTING POLE CONTROL PEDAL
100119	SELF CENTERING CONTROL PEDAL
100136	NYLON TRIGGER
100137	TRIGGER SPACER
100234	THREE-PHASE CABLE INVERTER
100235	SINGLE PHASE CABLE INVERTER
100239	PEDAL SET FOR FALCO
100578	SPRING CONN. PLATE
100586	SEE P/N 01393
100587	SEE P/N 01395
100588	SEE P/N 01394
100596	SPRING STRETCHER HOOK
100768	INVERTER ROD GUIDE BUSHING
100791	STICK-ON LABEL SIZE CM.12X80
100799	WASHER FOR PEDALS COCK 15,37X7,8X1,5
100802	PIN GUIDE WASHER
100854	STICK-ON LABEL SIZE CM.60X120
101097	STICK-ON LABEL
101140	4-POLE TERMINAL BOX 1 OUTPUT 3PH-CABLE
101141	4-POLE TERMINAL BOX 1 OUTPUT 1PH-CABLE
101269	STICK-ON LABEL V230 30X120
101270	STICK-ON LABEL V400 30X120
103265	DOUBLE VERTICAL LOCK
20510	8X20 SCREW UNI 5933
20515	10X30 SCREW UNI 5739
40011	6X25 SCREW UNI 5739
40012	SEEGER SIZE 6 471 UNI 7435
40022	6X10 SCREW UNI 5739
40031	FLAT WASHER
40174	COUNTER HEAD SCREW 6X8
40179	SLOTTED SCREW 3X10
40274	TOOTHED WASHER SIZE 4 UNI 6798
40291	BREMAS SINGLE PHASE INVERTER 4585
40500	BRASS NUT M4
40510	LEGRAND BAND 5X290
40638	SNAPLINK
40640	SAFETY BELT ART.7585525
40641	QUICK SAFETY HOOK
40837	CHAMFERED WASHER DIN 125 UNI 6592 4 ZNT
40902	PLASTIC SILENCER 1/4
40974	NYLON CABLE PRESS PG11
41156	POWER SUPPLY ELECTRICAL CABLE
41166	4 POLE (ALL "G") STRIP
41168	PA262 (4 POLE ABS) COVER
41197	4X16 SCREW
41254	COCK GASKETS KIT
600900	ROD RETURN SPRING

PANZITTA SALES & SERVICE
72 George Avenue
Wilkes-Barre, PA 18705
570-822-6720 800-822-6720
www.panzittasales.com

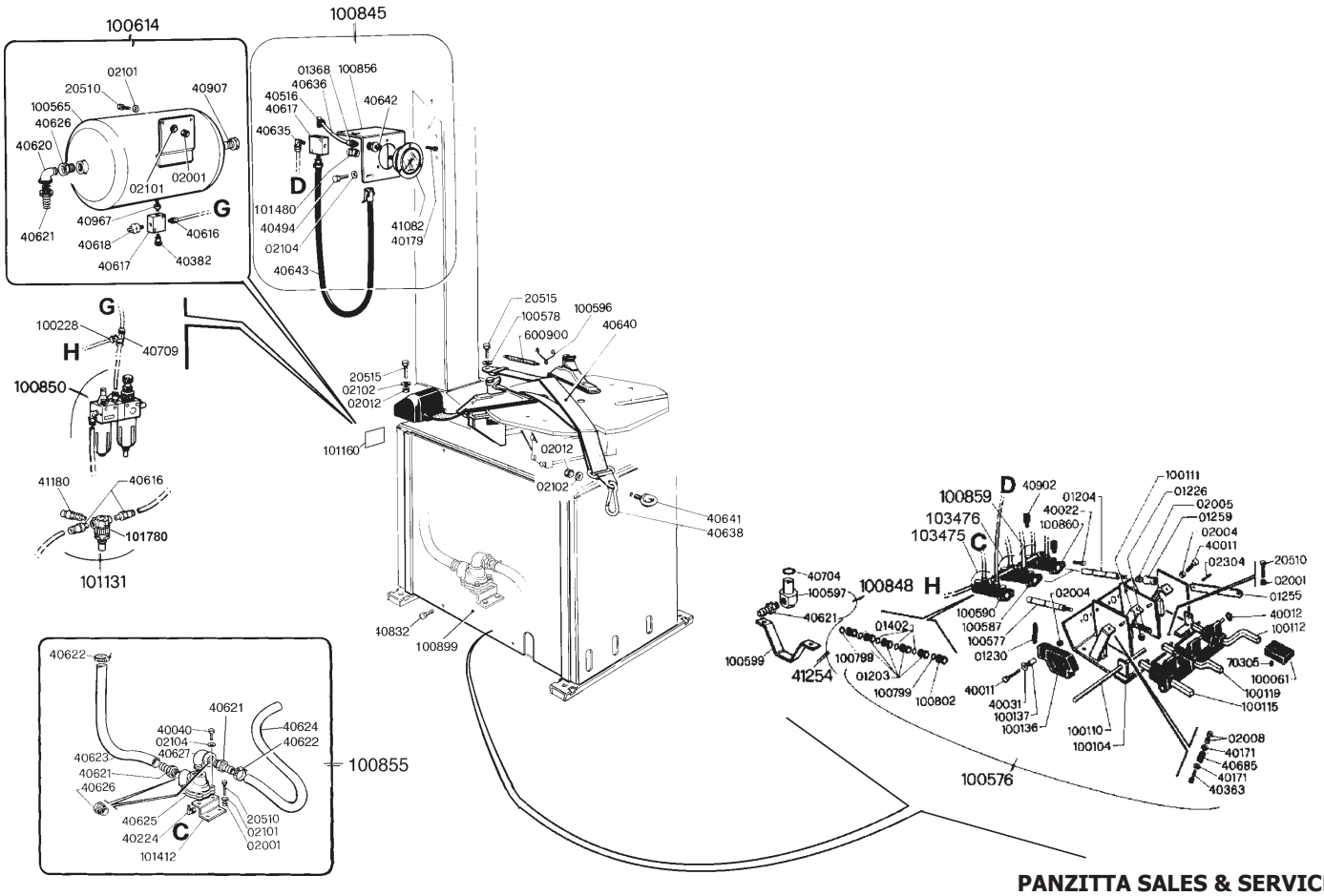

PANZITTA SALES & SERVICE
72 George Avenue
Wilkes-Barre, PA 18705
570-822-6720 800-822-6720
www.panzittasales.com

20510	TE M8X20 UNI5739 SCREW
40011	TE M6X25 UNI5739 8.8 SCREW
40022	TE M6X10 UNI5739 8.8 SCREW
40902	1/4 PLASTIC SILENCER
100111	NYLON SPACER
100860	BEAD BREAKER COCK GROUP
01203	OR SPACER
01204	COCK ROD
01226	PEDAL RETURN SPRING
01230	TRIGGER RETURN SPRING
01255	COCK ROD
01259	COCK ROD FORK
01368	1510 1/8 6X4 JOINT
01402	OR GASKET 16X8X4
02001	NUT MA 8 934 5588
02004	NUT MA 6 934 5588
02005	NUT MA 8 936 5589
02008	NUT MA 5 934 5588
02012	NUT MA 10 934 5588
02101	CHANFERED WASHER 8 125 UNI 6592
02102	CHANFERED WASHER 10 125 UNI 6592
02104	CHAMFERED WASHER 6 125 UNI 6592
02304	SPRING COTTER 4X16 1481 UNI 6873
100061	PEDAL
100104	PEDAL BODY
100110	PEDAL PIN
100112	BEAD LOOSENER CONTROL PEDAL
100115	TILTING POLE CONTROL PEDAL
100119	SELF CENTERING CONTROL PEDAL
100136	NYLON TRIGGER
100137	TRIGGER SPACER
100228	8X6 AIR HOSE
100565	TUBELESS INFLATOR TANK WITH PLATE
100576	PEDAL SET FOR COLIBRI AND GRIFONE
100577	TUBELESS COCK ROD
100578	SPRING CONN. PLATE
100587	SEE P/N 01395
100590	SEE P/N 100221
100596	SPRING STRETCHER HOOK
100597	ROTATING COLLECTOR FOR INFL.
100599	COLLECTOR BEARING
100614	TANK GROUP FOR TUBELESS INFL.
100799	WASHER FOR PEDALS COCK 15,37X7,8X1,5
100802	PIN GUIDE WASHER
100845	GAUGE GROUP FOR TUBELESS INFL.
100848	ROTATING COLLECTOR+HOSE HOLDER FOR IT
100850	REG.FILTER+LUBR.SET
100855	VALVE GROUP FOR TUBELESS INFL.
100856	GAUGE BEARING
100859	BEAD BREAKER COCK
100899	SIDE COVER
101131	1/4" PRESSURE REG.039 04R 3,5 BAR+VAL
101160	STICK ON LABEL 40X60
101412	POLYVALENT VALVE SUPPORT
101480	SLEEVE
101780	LIMITING PRESSURE REGATOR
103475	PEDAL LEFT COCK
103476	PEDAL CENTRAL COCK
20510	8X20 SCREW UNI 5933
20515	10X30 SCREW UNI 5739
40011	6X25 SCREW UNI 5739
40012	SEEGER SIZE 6 471 UNI 7435
40031	FLAT WASHER
40040	INNER HEX. HEAD 6X35
40171	FLAT WASHER 5X16X1,6
40179	SLOTTED SCREW 3X10
40224	CONNECTION 1500 6X8 1/4
40363	5X40 INNER HEX. HEAD
40382	WATER DISCHARGE COCK 1/4
40494	6X25 INNER HEX. HEAD
40516	JUNCTION ART.1500 1/4 6X4
40616	QUICK COUPLING 6X8 1/4
40617	1/4 A WAY DISTRIBUTION BLOCK
40618	1/4 ZE 003101 SAFETY VALVE
40620	3/4 ANGLE
40621	HOSE JUNCTION 3/4X20
40622	TUBE FASTENER 22X31
40623	20X31 HOSE 18BAR
40624	L480 HOSE 18BAR
40625	1" BLOW VALVE
40626	HEX. GEAR
40627	1" HOSE CONN. ELBOW
40635	QUICK COUPLING
40636	AIR TUBE 6X4 L.80
40638	SNAPLINK
40640	SAFETY BELT ART.7585525
40641	QUICK SAFETY HOOK
40642	AIR DISCHARGE PUSH
40643	INFLATION COMPLETE HOSE
40685	RUBBER SPRING 16X6,5X25
40704	OR GASKET 3093
40709	“T” CONNECTION 8/6
40907	HEX. OT CAP M.Z. 1" FOR IT BOTTLE
40967	CONIC NIPPLE 1/4 3/8
41082	GAUGE SIZE 80
41180	1/8 3,5BAR SAFETY VALVE
41254	COCK GASKETS KIT
600900	ROD RETURN SPRING
70305	STEI M6X6 SCREW CONICAL BIT UNI5927

PANZITTA SALES & SERVICE
72 George Avenue
Wilkes-Barre, PA 18705
570-822-6720 800-822-6720
www.panzittasales.com

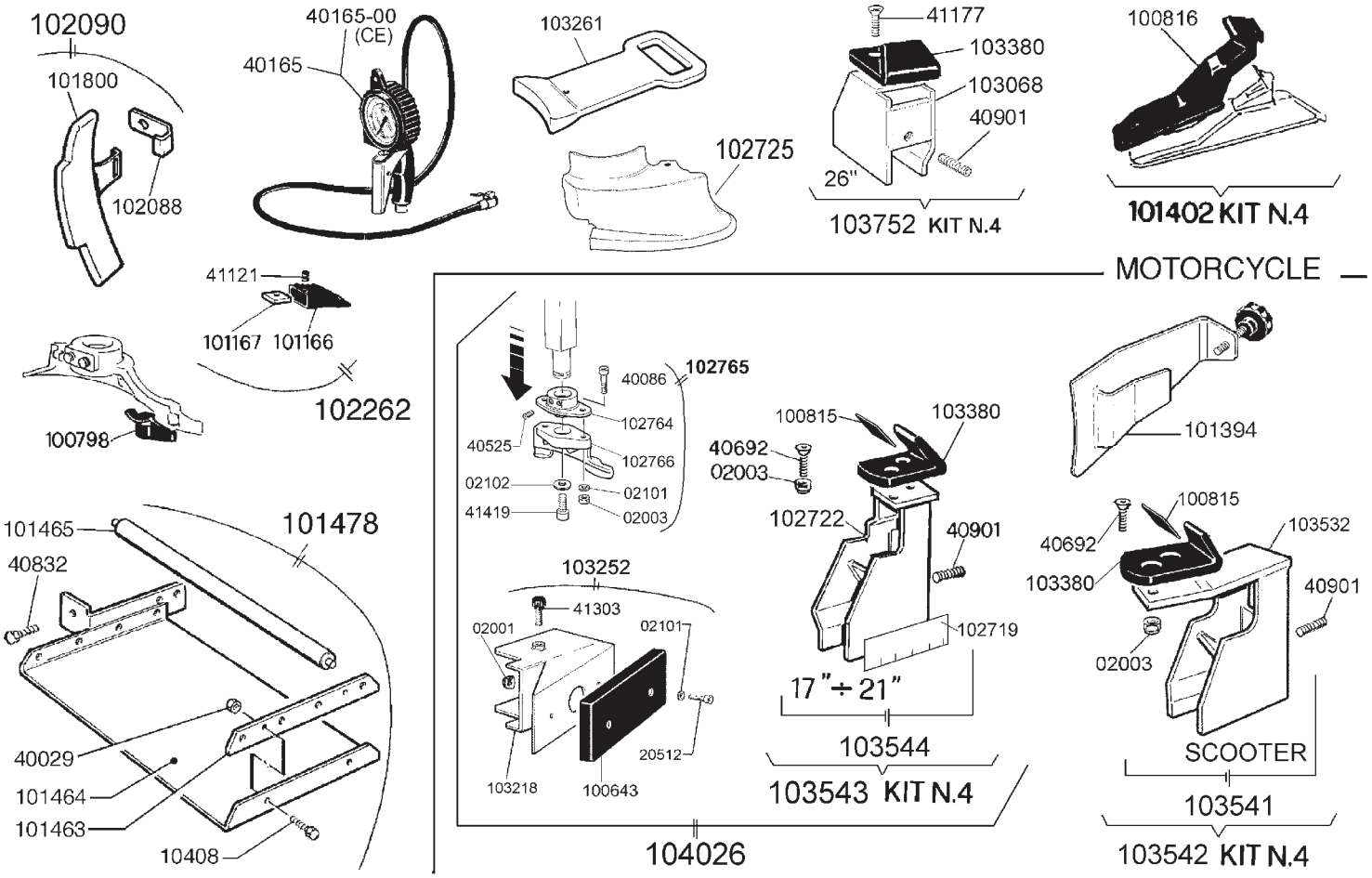

PANZITTA SALES & SERVICE
72 George Avenue
Wilkes-Barre, PA 18705
570-822-6720 800-822-6720
www.panzittasales.com

02001	NUT MA 8 934 5588
02003	LOW LOCKNUT M8 UNI 7474
02101	WASHER BIS. UNI 6592 8 ZNT B.
02102	CHANFERED WASHER 10 125 UNI 6592
100643	BEAD BREAKER BEARING
100798	TOLLER TAB
100815	19" WEDGE CAP
100816	SLIDE GUARD FOR 19" WEDGE
101166	PLASTIC LEVER COVER
101167	PLATE
101394	MOTORCYCLE BEADBREAKER TOOL ADAPTER
101402	SLIDE GUARD PROTECTION KIT for 19" Wedge
101463	6 HOLES BLADE
101464	ROLLER BED BASIC METAL PLATE
101465	ROLLER
101478	ROLLER BED
101800	SEE P/N 102090
102088	FIXING PLATE FOR BEAD BREAKER PROTECTION
102090	BEADBREAKER TOOL NYLON PROTECTION KIT
102262	PREASSING BEAD-KIT
102719	STICK ON LABEL MOTO
102722	CLAMP LOWER PART for SCOOTER ADAPTER
102725	MOUNTING-HEAD PROTECTION
102764	MOUNTING-HEAD SUPPORT
102765	MOUNTING-HEAD SUPPORT GROUP
102766	PLASTIC MOUNTING-HEAD
103068	26" CLAMP LOWER PART
103218	MOTORCYCLE BEADBREAKER SUPPORT
103252	MOTORCYCLE BEADBREAKER SUPPORT GROUP
103261	LOW ZEPPA
103380	CLAMP UPPER SIDE
103532	CLAMP LOWER PART for SCOOTER ADAPTER
103541	SINGLE MOTORCYCLE ADAPTER
103542	SCOOTER ADAPTERS KIT
103543	MOTORCYCLE ADAPTERS KIT
103544	SINGLE SCOOTER ADAPTER
103752	26" ADAPTERS KIT
104026	MOTORCYCLE KIT
10408	6X20 SCREW UNI 5739
20512	8X20 INNER HEX.HEAD
40029	LOCKNUT MA6 985 7474
40086	8X35 INNER HEX. HEARD
40165	INFLATING GUN
40165-00	CEE INFLATING GUN
40525	HEADLESS SCREW
40692	8X25 SCREW
40832	SELF THREADED NUT 6,3X13
40901	FILLISTER HEAD HEX SCREW 10X40
41121	STEI UNI 5923 M10X10 BURNISHED
41177	8X12 SCREW
41303	ELESA KNOB
41419	INNER HEX. HEAD CAP SCREW 10X25

PANZITTA SALES & SERVICE
72 George Avenue
Wilkes-Barre, PA 18705
570-822-6720 800-822-6720
www.panzittasales.com

PNEUMATIC SCHEMATIC

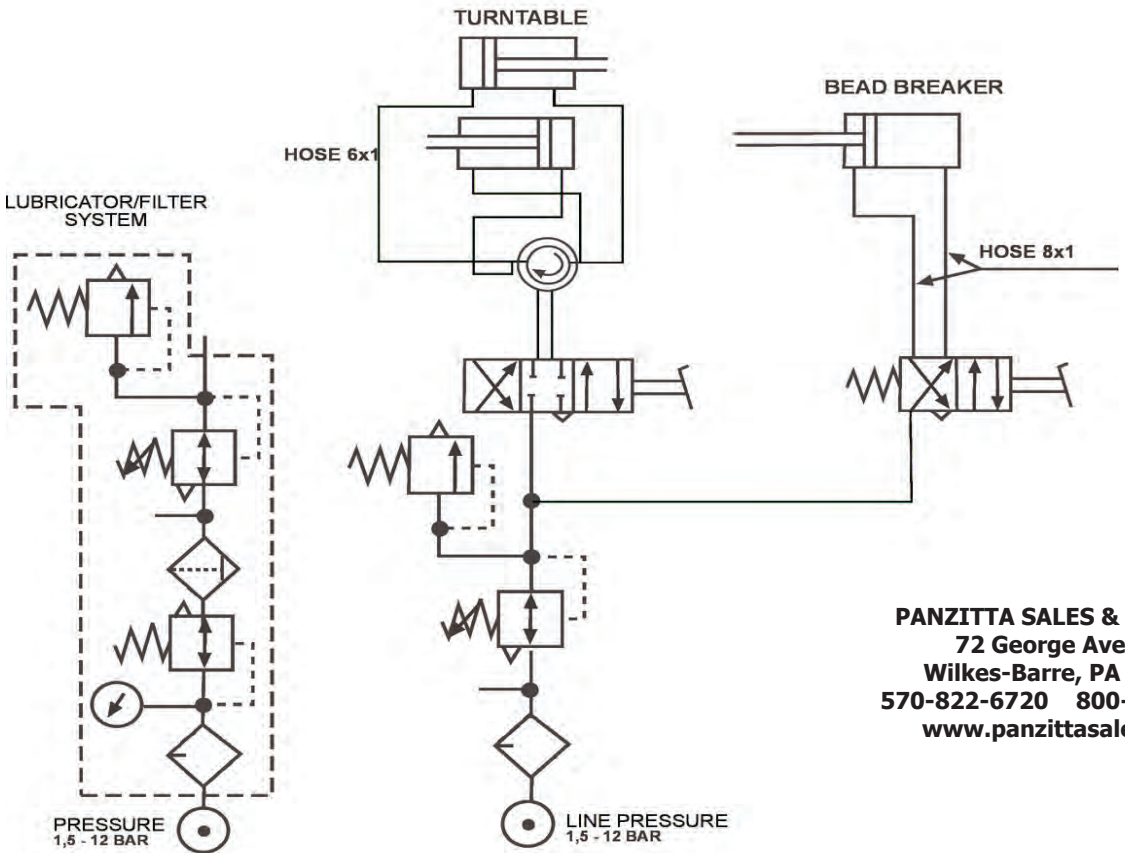

PANZITTA SALES & SERVICE
72 George Avenue
Wilkes-Barre, PA 18705
570-822-6720 800-822-6720
www.panzittasales.com

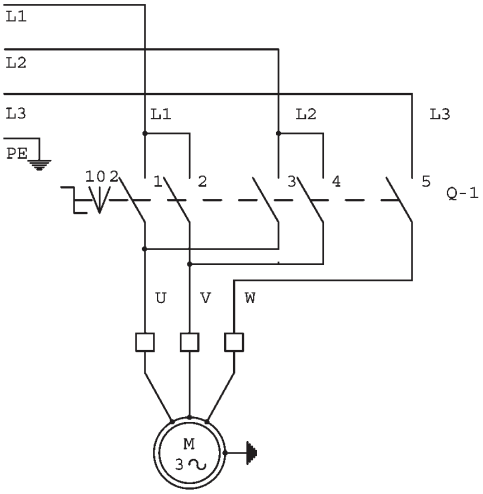

MOTORE RIDUTTORE

Q-1

	X	X		X		2	POS.
						0	
X			X	X		1	
1	2	3	4	5	6	CONT.	
I		II		III		ELEM.	

1-ROTAZIONE ORARIA

2-ROTAZIONE ANTIORARIA

PANZITTA SALES & SERVICE
72 George Avenue
Wilkes-Barre, PA 18705
570-822-6720 800-822-6720
www.panzittasales.com

DISEGNO : 100078	DATA	DIS
	21/11/02	PEL
3 Ph - 1 speed		

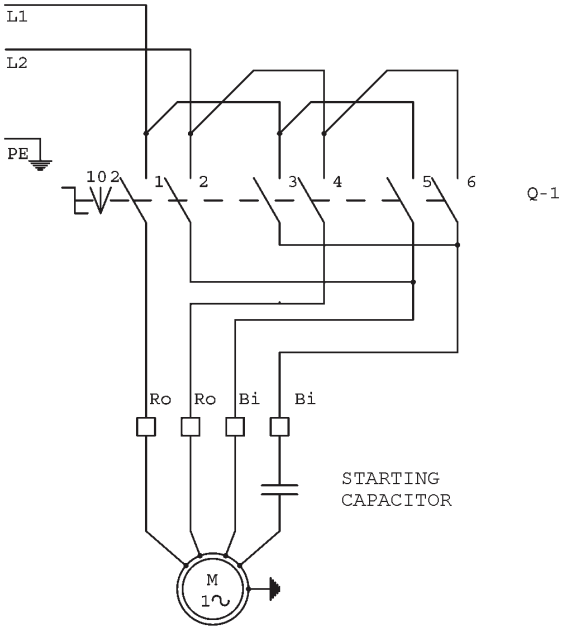

TRANSIMISSION MOTOR

Q-1

X			X	X	X	2	POS.
						0	
X	X	X	X			1	
1	2	3	4	5	6	CONT.	
I		II		III		ELEM.	

1- COUNTER ROTATION
2- COUNTER CLOCKWISE

PANZITTA SALES & SERVICE
72 George Avenue
Wilkes-Barre, PA 18705
570-822-6720 800-822-6720
www.panzittasales.com

TABLE NUMBER : 100183	DATA	DIS
	21/11/02	PEL
1 Ph - 1 speed		