CHAPTER 4
PARTS

PARTS BY PICTORIAL

This chapter describes assemblies/subassemblies/parts considered replaceable at on-site field installation.

NOTE: *The following is a breakdown description of the Serial Number.*

Serial # Location - Back side in front of scale assembly.

Example:

A 95 14 0001

Example:

98 10 D 0001

NS: NOT SHOWN IN PICTORIAL

NOTE: All Serial A units and Serial B R134a units use EAP0063---- CPU Board and 7004-2284-01 Solenoid Driver Board. These boards use software versions 1.xx and 2.xx. Serial B R12 units and all Serial C units use EAP0152---- CPU Board and EAP0151---- Solenoid Driver Board (with software 3.xx only). When replacing an earlier board with a later board, both the CPU and Solenoid Driver boards must be changed.

PANZITTA SALES & SERVICE
72 George Avenue
Wilkes-Barre, PA 18705
570-822-6720 800-822-6720
www.panzittasales.com

PANZITTA SALES & SERVICE
72 George Avenue
Wilkes-Barre, PA 18705
570-822-6720 800-822-6720
www.panzittasales.com

FRONT VIEW (STANDARD SUN VERSION)

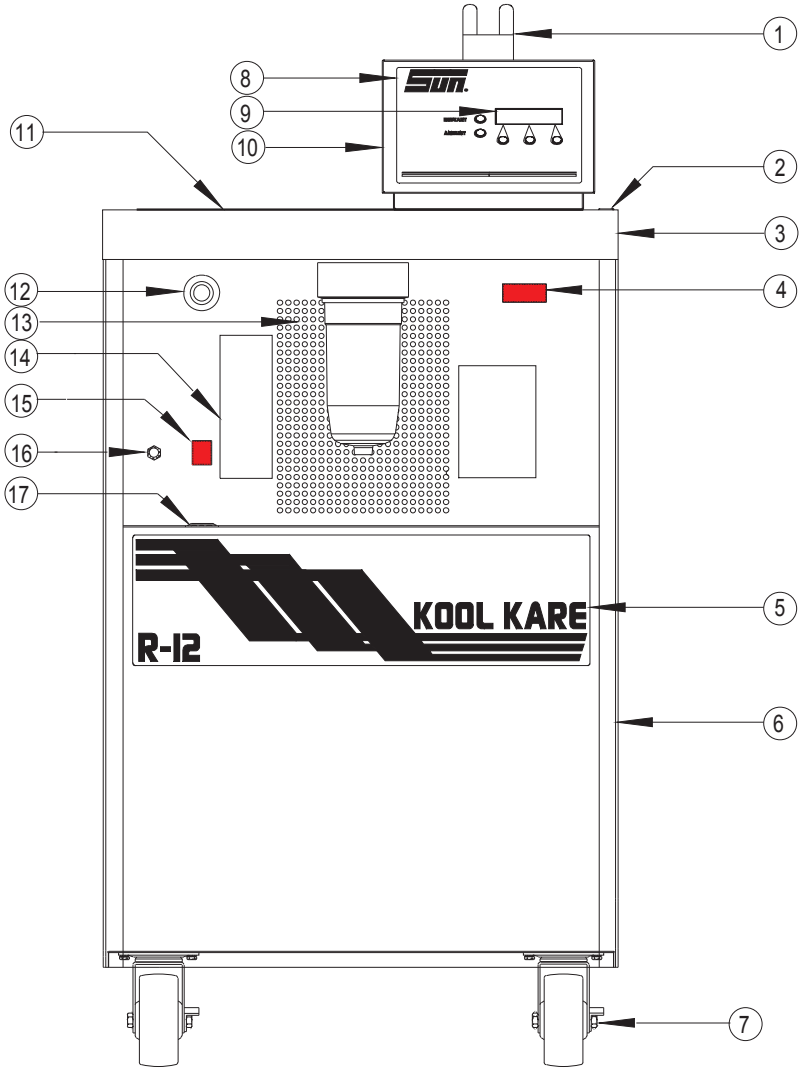

ITEM	DESCRIPTION	PART NUMBER	ITEM	DESCRIPTION	PART NUMBER
1	Panel, Upper Back	EASD056C15A	11a	Tray, Storage	EAC0031C00A
2	Plug	1374-0031	11b	Mat, 21” x 9”	7019-0085-07
3	Panel, Upper Tray	EASD057C00A	12	Beeper, Alarm	0316-0205-01
4	Switch, On/Off	1922-0118-01	13a	Plastic Separator Assy.	See Page 4-24
5a	Label, R-12	EAL0169C00A	13b	Metal Separator Assy.	See Page 4-25
5b	Label, R-134a	EAL0170C00A	14	Label, Service Maint.	EAL0192C00A
6	Cabinet, Lower	EASB021A00A	15	Switch, Service Maint.	0764-0254-01
7	Caster, with Brake	3645-0055-02	16a	Cap, R-12 End	4312-5007-01
8	Label, Panel	EAL0167C00A	16b	Cap, R-134a End	4312-5010-01
9a	Board, CPU (w/o LCD)	EAP0063C06A	16c	Nipple, Bulkhead R-12	0647-0284-01
9b	Board, Low Temp LCD	EAP0082C05A	16d	Nipple, Bulkhead R134	0647-0286-01
9c	Board, High Temp LCD	EAP0082C00A	17a	Indicator, Moisture	7009-2105-02
9d	Board, CPU w/High Temp Disp	EAP0063C00A	17b	Indicator Kit. Moisture	EAK0016C00A
9e	Board, CPU w/Low Temp Disp	EAP0063C05A	**NS**	Envelope, Clear	4211-0001-01
10	Panel, Upper Control	EASD056C00A			

PANZITTA SALES & SERVICE
72 George Avenue
Wilkes-Barre, PA 18705
570-822-6720 800-822-6720
www.panzittasales.com

FRONT VIEW (STANDARD SNAP-ON VERSION)

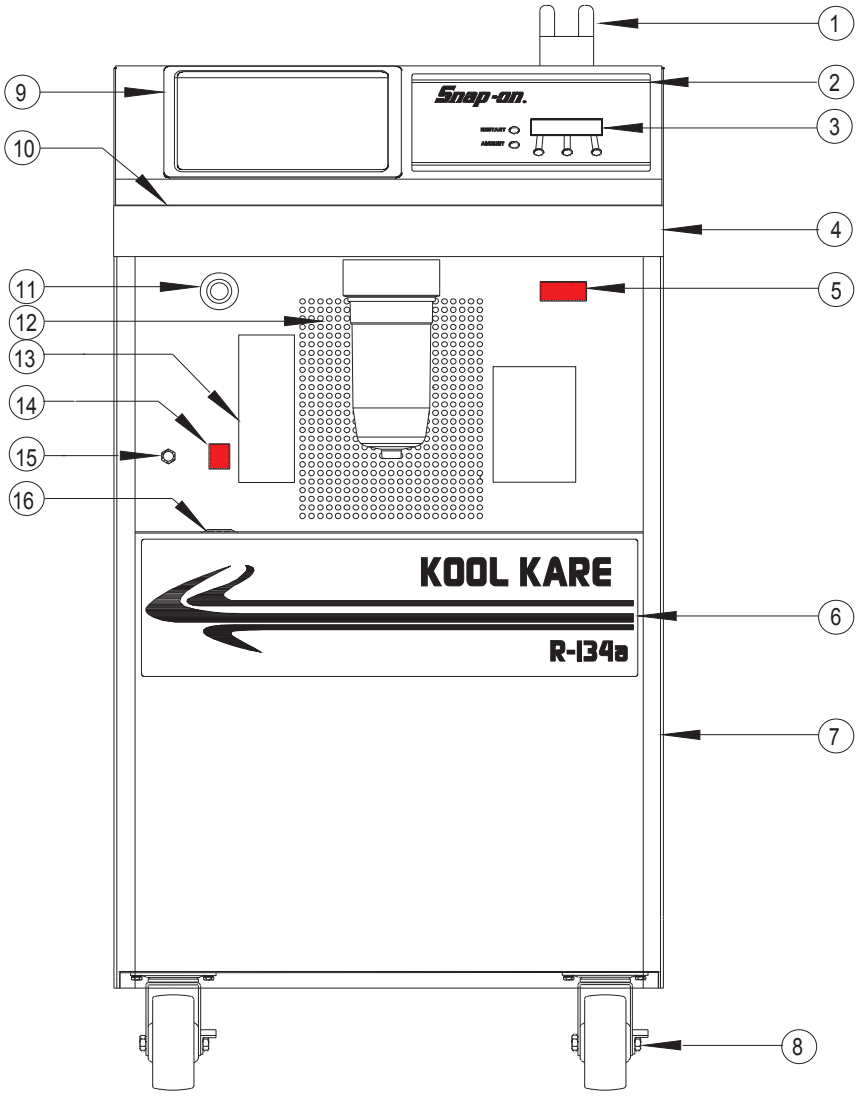

ITEM	DESCRIPTION	PART NUMBER	ITEM	DESCRIPTION	PART NUMBER
1	Bracket, Gauge	7012-1537-02	10	Mat, 21” x 12”	7019-0085-08
2	Label, Panel	EAL0168C00A	11	Beeper, Alarm	0316-0205-01
3a	Board, CPU w/HT Disp	EAP0063C00A	12a	Plastic Separator Assy.	See Page 4-24
3b	Board, CPU w/LT Disp	EAP0063C05A	12b	Metal Separator Assy.	See Page 4-25
3c	Board, CPU (w/o LCD)	EAP0063C06A	13	Label, Service Maint.	EAL0192C00A
1	Board, Low Temp LCD	EAP0082C05A	14	Switch, Service Maint.	0764-0254-01
2	Board, High Temp LCD	EAP0082C00A	15a	Cap, R-12 End	4312-5007-01
4	Panel, Upper Tray	EASB058C00A	15b	Cap, R-134a End	4312-5010-01
5	Switch, On/Off	1922-0118-01	15c	Nipple, Bulkhead R-12	0647-0284-01
6a	Label, R-12	EAL0171C00A	15d	Nipple, Bulkhead R-134	0647-0286-01
6b	Label, R-134a	EAL0172C00A	16a	Indicator, Moisture	7009-2105-02
7	Cabinet, Lower	EASB021A00A	16b	Indicator Kit. Moisture	EAK0016C00A
8	Caster, with Brake	3645-0055-02	**NS**	Envelope, Clear	4211-0001-01
9	Tray, Storage	EAC0032C00A			

PANZITTA SALES & SERVICE
72 George Avenue
Wilkes-Barre, PA 18705
570-822-6720 800-822-6720
www.panzittasales.com

FRONT VIEW (ENHANCED SNAP-ON VERSION)

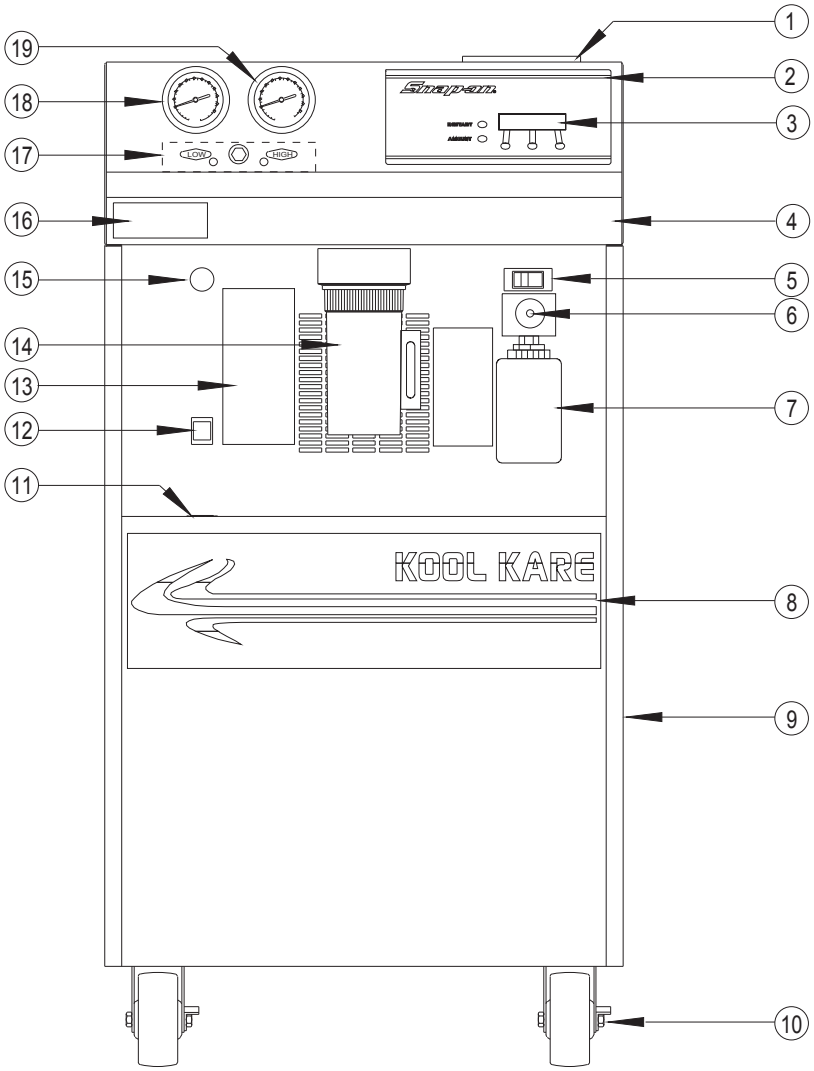

ITEM	DESCRIPTION	PART NUMBER	ITEM	DESCRIPTION	PART NUMBER
1	Tray, Storage	EAC0031C00A	11a	Indicator, Moisture	7009-2105-02
2a	Label, Sun Panel	EAL0295L00A	11b	Indicator Kit. Moisture	EAK0016C00A
2b	Label, Snap-on Panel	EAL0296L00A	12	Switch, Service Maint.	0764-0254-01
3a	Board, CPU (w/LT Disp) Version 2.xx	EAP0063C07A	13	Label, Service Maint.	EAL0199C00A
3b	Board, CPU (w/LT Disp) Version 3.xx	EAP0152L00A	14	Metal Separator Assy.	See Page 4-25
4	Panel, Upper Control	EASB100L00A	15	Beeper, Alarm	0316-0205-01
5	Switch, On/Off	1922-0118-01	16	Label, Caution	EAL0065C00A
6a	Valve, Oil Charge	1-3581	17	Manifold, Panel Mount	1-4081
6b	Adapter, Bottle	0647-0134	17a	Kit, Valve Seal	EAK0017C00A
7	Bottle, Oil	1-585	18	Gauge, Low Side	8-2120
8a	Label, Sun Cabinet	EAL0287L00A	18a	Lens, Low Gauge	8-1212
8b	Label, Snap-on Cabinet	EAL0288L00A	19	Gauge, High Side	8-2020
9	Cabinet, Lower	EASB099L00A	19a	Lens, High Gauge	8-1212
10	Caster, with Brake	3645-0056-02	**NS**	Envelope, Clear	4211-0001-01

PANZITTA SALES & SERVICE
72 George Avenue
Wilkes-Barre, PA 18705
570-822-6720 800-822-6720
www.panzittasales.com

FRONT VIEW (STANDARD PROLINE-734AP)

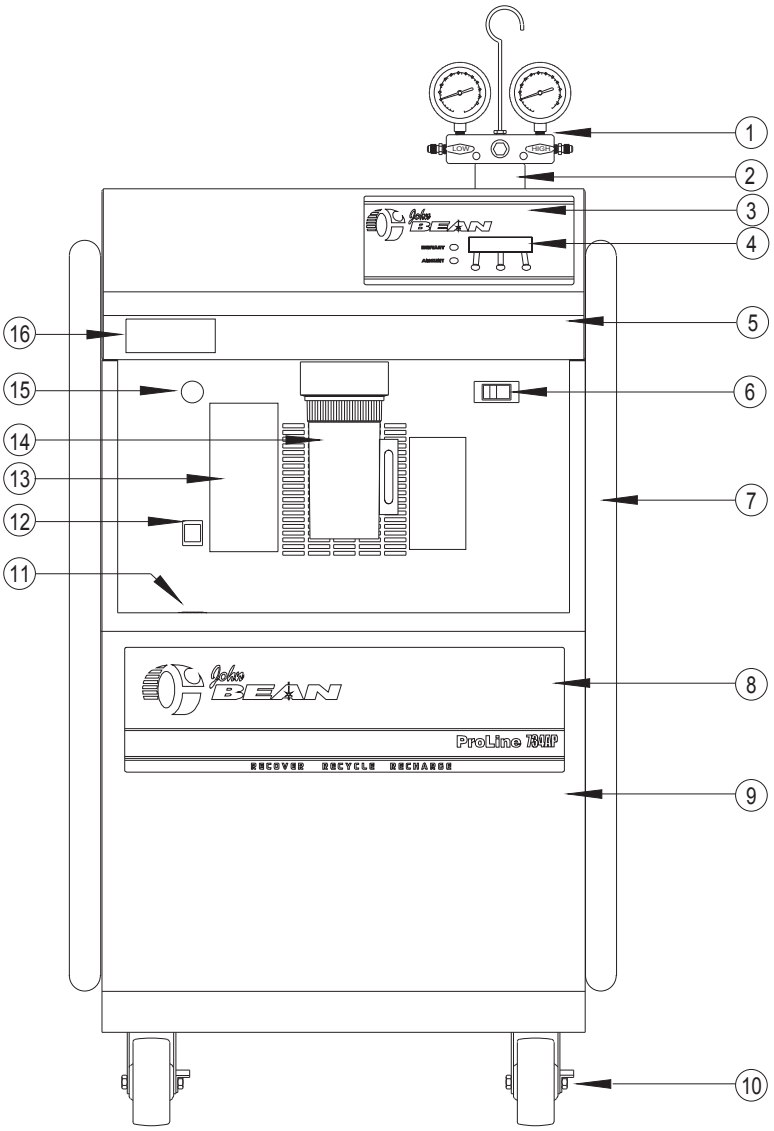

ITEM	DESCRIPTION	PART NUMBER	ITEM	DESCRIPTION	PART NUMBER
1	Gauge Set Assy.	See Page	10	Caster, with Brake	3645-0054-02
2a	Bracket, Gauge Set	EASC086C06A	11a	Indicator, Moisture	7009-2411-01
3	Label, JBC Panel	EAL0297L00A	11b	Indicator Kit. Moisture	EAK0016C00A
4	Board, CPU/Display Version 2.xx	EAP0063C07A	12	Switch, Service Maint.	0764-0254-01
5	Panel, Upper Control	EASF102L00A	13	Label, Service Maint.	EAL0199C00A
6	Switch, On/Off	1922-0118-01	14	Metal Separator Assy.	See Page 4-25
7a	Frame, Tube (2)	EASC101L01	15	Beeper, Alarm	0316-0205-01
7b	Frame, Screw (16)	0403-1681-24	16	Label, Caution	EAL0065C00A
8	Label, JBC Cabinet	EAL0299L00A	**NS**	Envelope, Clear	4211-0001-01
9	Panel, Lower Cabinet	EASF102L80A			

PANZITTA SALES & SERVICE
72 George Avenue
Wilkes-Barre, PA 18705
570-822-6720 800-822-6720
www.panzittasales.com

BACK VIEW (STANDARD SUN VERSION)

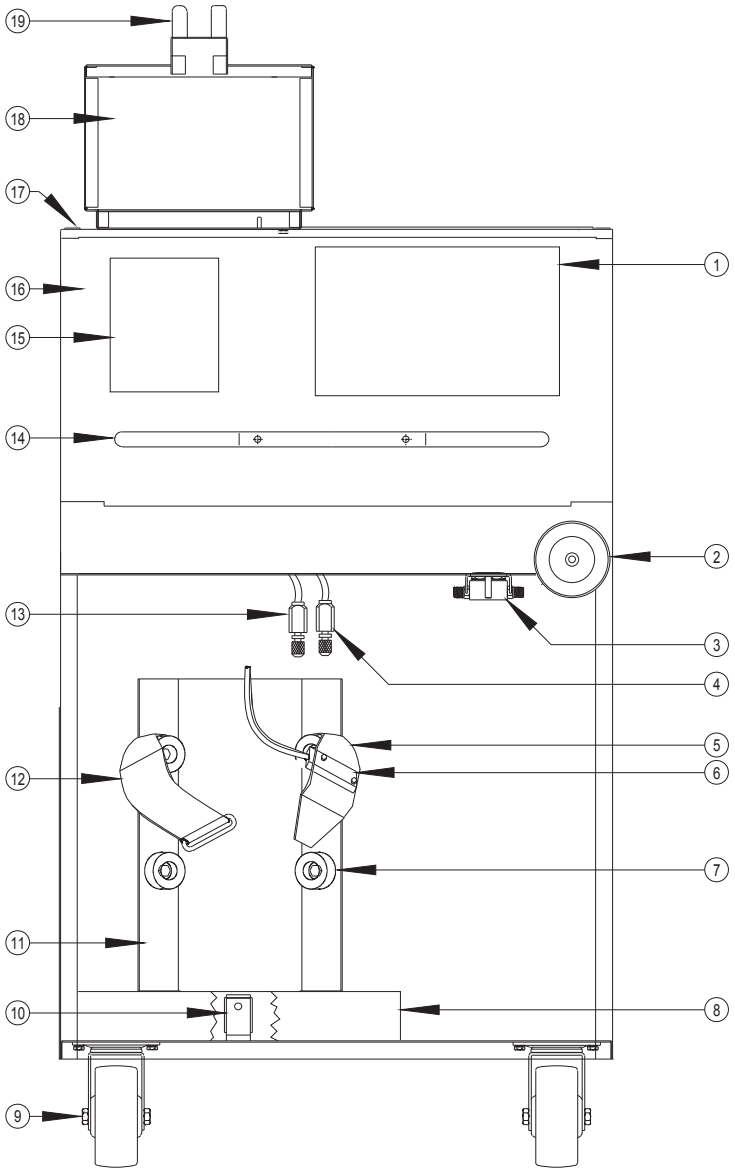

ITEM	DESCRIPTION	PART NUMBER	ITEM	DESCRIPTION	PART NUMBER
1	Label, Warnings	EAL0067C00A	10	Load Cell Assy.	EAA0232L00A
2a	Kit, Filter Dryer	EAK0030C01AB	11	Scale Assy.	7009-2456-01
2b	Strap, Velcro	0424-0807-01	a	Plate, Scale Top	7003-0727-01
3a	Indicator, Moisture	7009-2105-02	12	Strap, Tank Velcro LF	0424-0805-01
3b	Kit, Moisture Indicator	EAK0016C00A	13a	Hose, R-12 BLUE	3988-0304-04
4a	Hose, R-12 RED	3988-0303-02	13b	Valve, Anti-Blow Back	4719-0055-01
4b	Valve, Anti-Blow Back	4719-0055-01	13c	Hose, R-134a BLUE	3988-0285-04
4c	Hose, R-134a RED	3988-0284-02	13d	Valve, Anti-Blow Back	4719-0055-02
4d	Valve, Anti-Blow Back	4719-0055-02	14	Hanger, AC Cord	7012-1369-03
5	Strap, Tank Velcro RT	0424-0806-02	15	Label, Oil Change	EAL0038C00A
6	Sensor, Temperature	7009-2405-01	16	Panel, Lower Back	EASB057C15A
7	Rubber, Foot	1489-0017-01	17	Plug	1374-0031
8	Guard, Scale	EASC035C00A	18	Panel, Upper Back	EASD056C15A
9	Caster w/o Brake	3645-0055-01	19	Bracket, Gauge	Part of Item 18

PANZITTA SALES & SERVICE
72 George Avenue
Wilkes-Barre, PA 18705
570-822-6720 800-822-6720
www.panzittasales.com

BACK VIEW (STANDARD SNAP-ON VERSION)

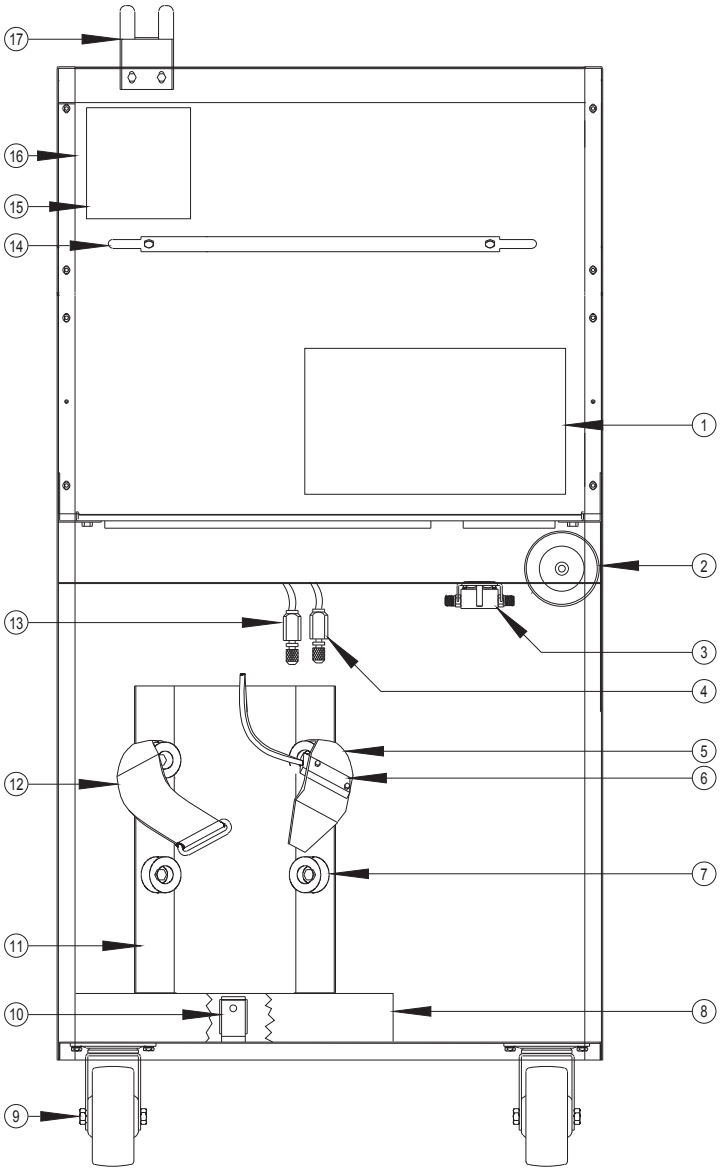

ITEM	DESCRIPTION	PART NUMBER	ITEM	DESCRIPTION	PART NUMBER
1	Label, Warnings	EAL0067C00A	9	Caster w/o Brake	3645-0055-01
2a	Kit, Filter Dryer	EAK0030C01AB	10	Load Cell Assy.	EAA0232L00A
2b	Strap, Velcro	0424-0807-01	11	Scale Assy.	7009-2456-01
3a	Indicator, Moisture	7009-2105-02	a	Plate, ,Scale Top	7003-0727-01
3b	Kit, Moisture Indicator	EAK0016C00A	12	Strap, Tank Velcro LF	0424-0805-01
4a	Hose, R-12 RED	3988-0303-02	13a	Hose, R-12 BLUE	3988-0304-04
4b	Valve, Anti-Blow Back	4719-0055-01	13b	Valve, Anti-Blow Back	4719-0055-01
4c	Hose, R-134a RED	3988-0284-02	13c	Hose, R-134a BLUE	3988-0285-04
4d	Valve, Anti-Blow Back	4719-0055-02	13d	Valve, Anti-Blow Back	4719-0055-02
5	Strap, Tank Velcro RT	0424-0806-02	14	Hanger, AC Cord	7012-1369-03
6	Sensor, Temperature	7009-2405-01	15	Label, Oil Change	EAL0038C00A
7	Rubber, Foot	1489-0017-01	16	Panel, Lower Back	EASB058C15A
8	Guard, Scale	EASC035C00A	17	Bracket, Gauge	7012-1537-02

PANZITTA SALES & SERVICE
72 George Avenue
Wilkes-Barre, PA 18705
570-822-6720 800-822-6720
www.panzittasales.com

BACK VIEW (ENHANCED SNAP-ON VERSION)

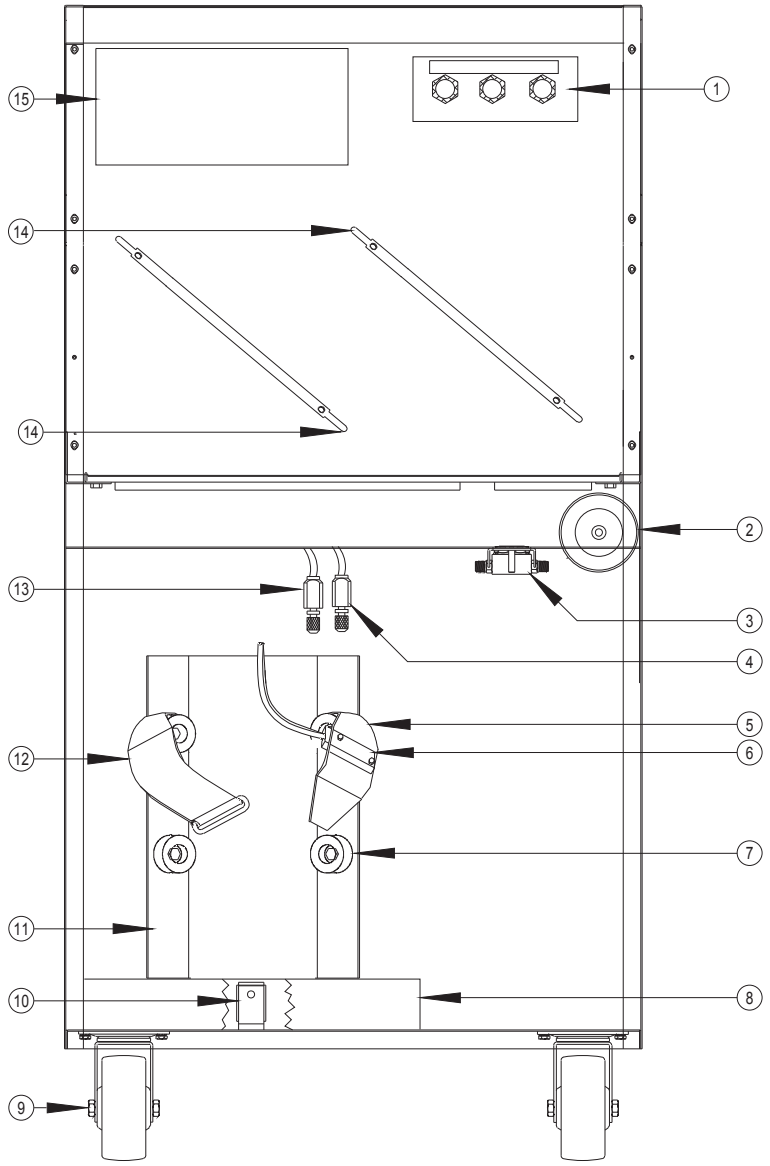

ITEM	DESCRIPTION	PART NUMBER	ITEM	DESCRIPTION	PART NUMBER
1a	Fitting, Bulkhead (2)	0647-0286-01	7	Rubber, Foot	1489-0017-01
1b	Fitting, Bulkhead (VAC)	1-15380	8	Guard, Scale	EASC035C00A
1c	Label, Service Ports	EAL0298L00A	9	Caster w/o Brake	3645-0056-01
2a	Kit, Filter Dryer	EAK0030C01AB	10	Load Cell Assy.	EAA0232L00A
2b	Strap, Velcro	0424-0807-01	11	Scale Assy.	7009-2456-01
3a	Indicator, Moisture	7009-2105-02	11a	Plate, Scale Top	7003-0727-01
3b	Kit, Moisture Indicator	EAK0016C00A	12	Strap, Tank Velcro LF	0424-0805-01
4a	Hose, R-134a RED	3988-0284-02	13a	Hose, R-134a BLUE	3988-0285-04
4b	Valve, Anti-Blow Back	4719-0055-02	13b	Valve, Anti-Blow Back	4719-0055-02
5	Strap, Tank Velcro RT	0424-0806-02	14	Hanger, AC Cord	EASB105L00A
6	Sensor, Temperature	7009-2405-01	15	Label, Warning	EAL0294L00A

PANZITTA SALES & SERVICE
72 George Avenue
Wilkes-Barre, PA 18705
570-822-6720 800-822-6720
www.panzittasales.com

BACK VIEW (STANDARD PROLINE-734AP)

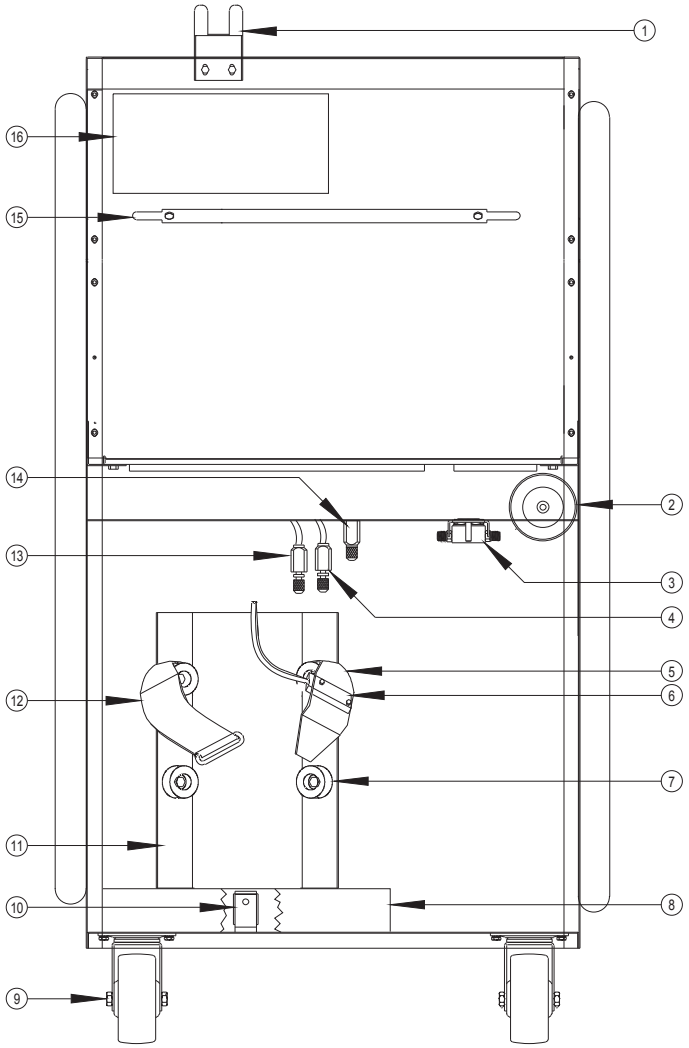

ITEM	DESCRIPTION	PART NUMBER	ITEM	DESCRIPTION	PART NUMBER
1	Bracket, Gauge	EASC086C06A	9	Caster w/o Brake	3645-0054-01
2a	Kit, Filter Dryer	EAK0030C01AB	10	Load Cell Assy.	EAA0232L00A
2b	Strap, Velcro	0424-0807-01	11	Scale Assy.	7009-2456-01
3a	Indicator, Moisture	7009-2105-02	11a	Plate, Scale Top	7003-0727-01
3b	Kit, Moisture Indicator	EAK0016C00A	12	Strap, Tank Velcro LF	0424-0805-01
4a	Hose, R-134a RED	3988-0284-02	13a	Hose, R-134a BLUE	3988-0285-04
4b	Valve, Anti-Blow Back	4719-0055-02	13b	Valve, Anti-Blow Back	4719-0055-02
5	Strap, Tank Velcro RT	0424-0806-02	14a	Fitting, Service Port	0647-0286-01
6	Sensor, Temperature	7009-2405-01	14b	Filter, Particle In-Line	7009-2418-01
7	Rubber, Foot	1489-0017-01	15	Hanger, AC Cord	7012-1369-01
8	Guard, Scale	EASC035C00A	16	Label, Warnings	EAL0294L00A

PANZITTA SALES & SERVICE
72 George Avenue
Wilkes-Barre, PA 18705
570-822-6720 800-822-6720
www.panzittasales.com

PUMP COMPARTMENT (STANDARD VERSION)

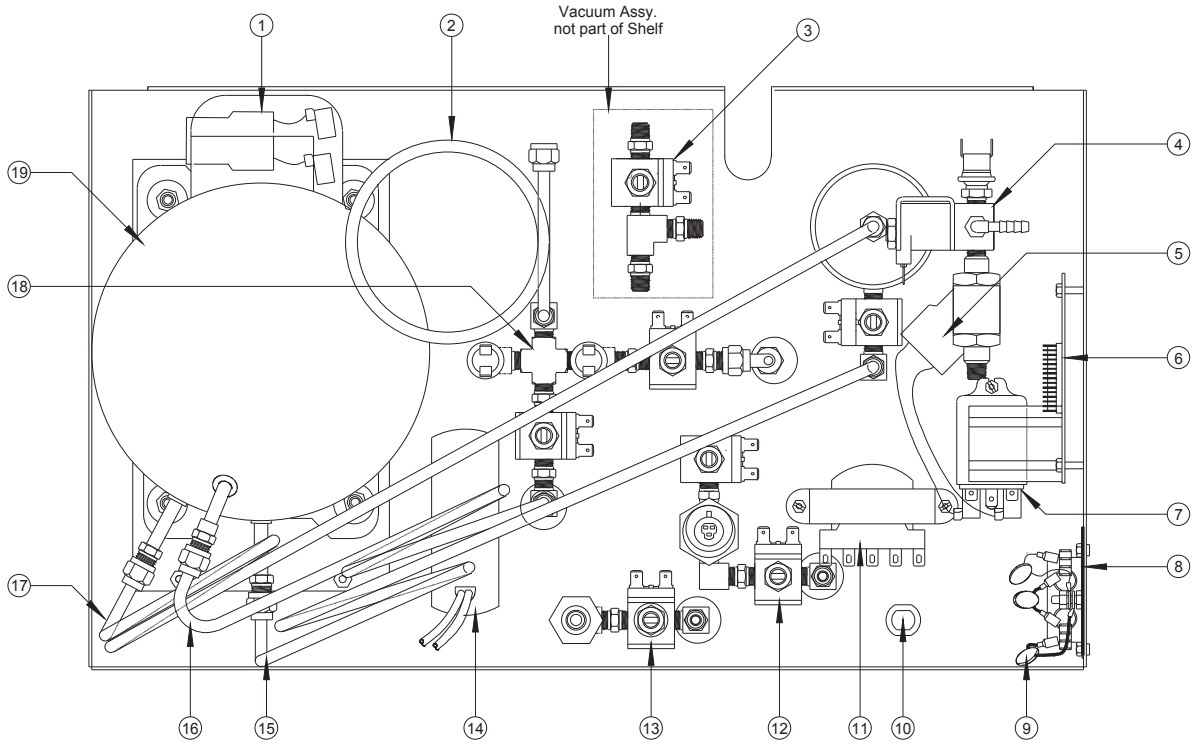

ITEM	DESCRIPTION	PART NUMBER	ITEM	DESCRIPTION	PART NUMBER
1	Cap Assy. Suppression	7009-2452-01	10a	Bushing, Heyco	2035-0008
2	Tube Assy. (T6)	EAH0007C00A	10b	Cord, AC Power	6001-0191-01
3	Solenoid Assy, Vacuum	See Page 4-12	11	Transformer, 24 Volt	0778-0486-01
4	Solenoid Assy. Oil	See Page 4-13	12	Solenoid Assy, Purge	See Page 4-14
5	Cap Assy. Suppression	7009-2452-01	13	Solenoid Assy, Charge	See Page 4-15
6a	Board, Plumbing	EAP0151L00A	14	Cap, Start	0303-0109-09
6b	Board, Plumbing	7009-2284-01	15	Tube Assy. (T2)	EAH0003C00A
1	Fuse, 3 amp (F1)	0739-0103	16	Tube Assy. (T1)	EAH0002C00A
2	Fuse, 1 amp (F2)	0739-0008	17	Tube Assy. (T3)	EAH0004C00A
7	Relay, External Pump	0783-0352-01	18	Solenoid Assy, Separator/Bypass	See Page 4-16
8	Filter, 3 amp Line	0749-0219-01	19	Compressor Assy.	7009-2258-02
9a	Varistors (1)	7009-1320	**NS**	Condenser	0111-0706-01
9b	Varistors (2)	7009-1320-03	**NS**	Fan, Condenser	0587-0504

PANZITTA SALES & SERVICE
72 George Avenue
Wilkes-Barre, PA 18705
570-822-6720 800-822-6720
www.panzittasales.com

PUMP COMPARTMENT (ENHANCED VERSION)

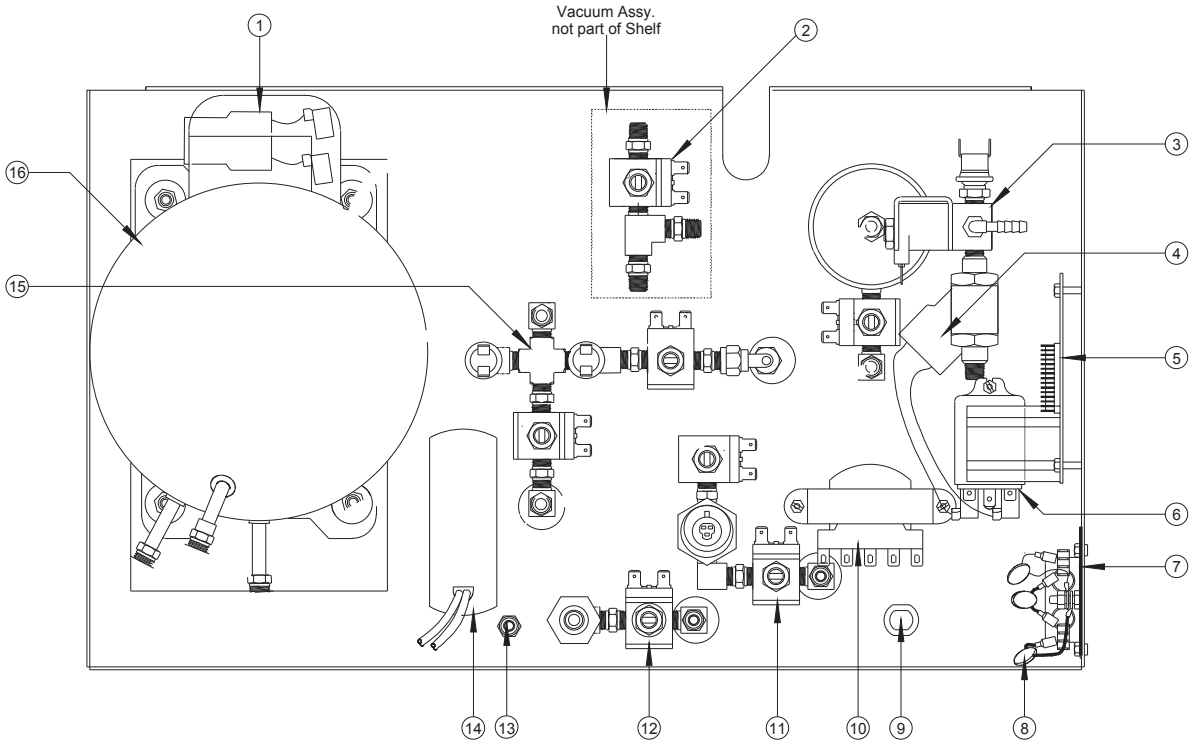

ITEM	DESCRIPTION	PART NUMBER	ITEM	DESCRIPTION	PART NUMBER
1	Cap Assy. Suppression	7009-2452-01	10	Transformer, 24 Volt	0778-0486-01
2	Solenoid Assy. Vacuum	See Page 4-12	11	Solenoid Assy, Purge	See Page 4-14
3	Solenoid Assy. Oil	See Page 4-13	12	Solenoid Assy, Charge	See Page 4-15
4	Cap Assy. Suppression	7009-2452-01	13a	Fitting, Service Port (PROLINE-734AP only)	0647-0286-01
5a	Board, Plumbing	EAP0151L00A			
5b	Board, Plumbing	7009-2284-01	13b	Filter, In-Line Particle	7009-2418-01
1	Fuse, 3 amp (F1)	0739-0103	13c	Nut, 7/16-20	0409-0215-01
2	Fuse, 1 amp (F2)	0739-0008	14	Cap, Start	0303-0109-09
6	Relay, External Pump	0783-0352-01	15	Solenoid Assy, Separator/Bypass	See Page 4-16
7	Filter, 3 amp Line	0749-0219-01	16	Compressor Assy.	7009-2258-02
8a	Varistors (1)	7009-1320	**NS**	Condenser	0111-0706-01
8a	Varistors (2)	7009-1320-03	**NS**	Fan, Condenser	0587-0504
9a	Bushing, Heyco	2035-0008			
9b	Cord, AC Power	6001-0191-01			

PANZITTA SALES & SERVICE
72 George Avenue
Wilkes-Barre, PA 18705
570-822-6720 800-822-6720
www.panzittasales.com

PUMP COMPARTMENT (SERIAL D)

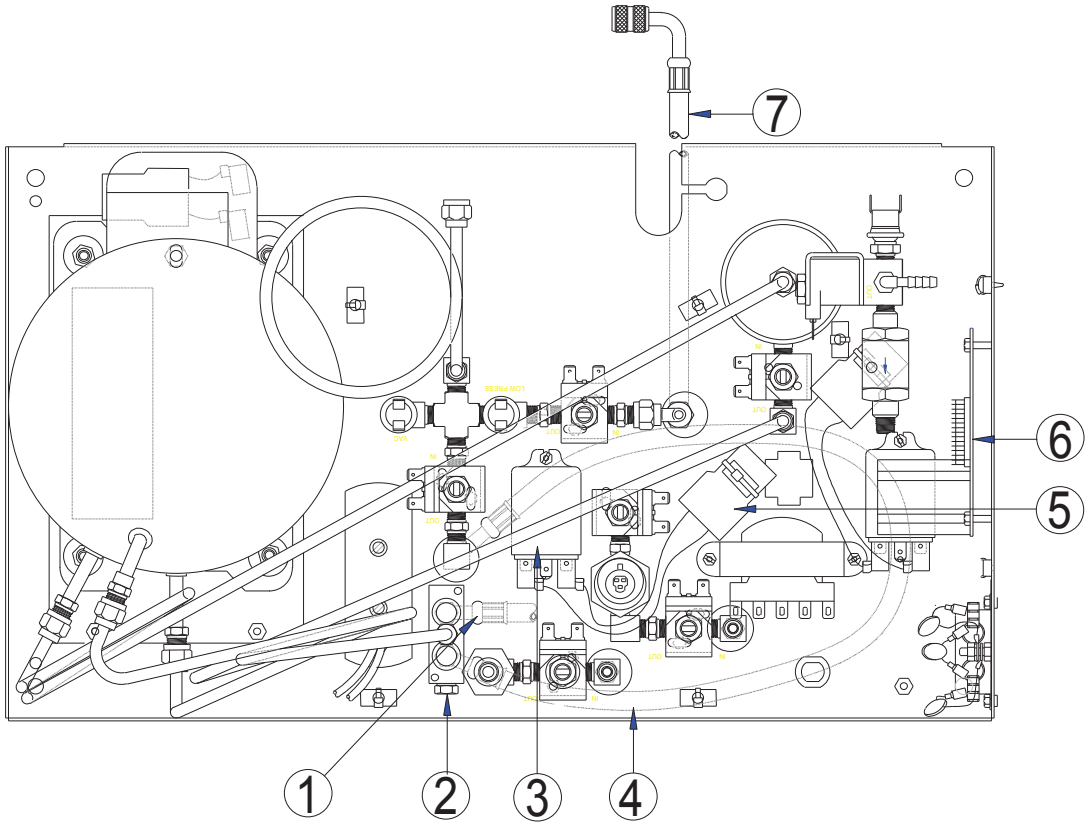

NOTE: This view shows Serial D differences

ITEM	DESCRIPTION	PART NUMBER	ITEM	DESCRIPTION	PART NUMBER
1	Hose	EAH0011C00A	6	Board, Plumbing	EAP0151L00A
2	Manifold, Vacuum Pump	EAA0258L10A	7	Hose	EAH0011C00A
3	Relay, 24 volt	0783-0352-01			
4	Hose	EAH0011L10A	**NS**	Display board	EAP0152L10AR
5	Suppression Cap Assy.	7009-2452-01	**NS**	Vacuum Pump Kit	EAK0227L00A

VACUUM SOLENOID ASSEMBLY (STANDARD)

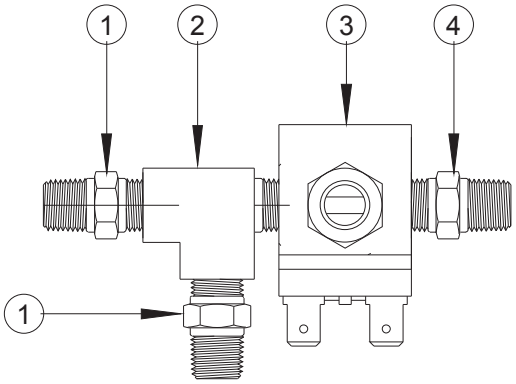

ITEM	DESCRIPTION	PART NUMBER	ITEM	DESCRIPTION	PART NUMBER
1	Fitting, 1/8 nptx7/16 Tubo	0647-0206-01	3	Solenoid, Vacuum	0304-0054-01
2	Fitting, 1/8mx1/8f Tee	0647-0208-01	4	Fitting 1/8x1/8 Nipple	4982-0076-01

VACUUM SOLENOID ASSEMBLY (ENHANCED)

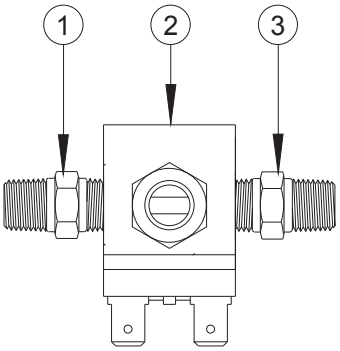

ITEM	DESCRIPTION	PART NUMBER	ITEM	DESCRIPTION	PART NUMBER
1	Fitting, 1/8 npt x 7/16 Tubo	0647-0206-01	3	Fitting 1/8x1/8 Nipple	4982-0076-01
2	Solenoid, Vacuum	0304-0054-01			

OIL SOLENOID ASSEMBLY

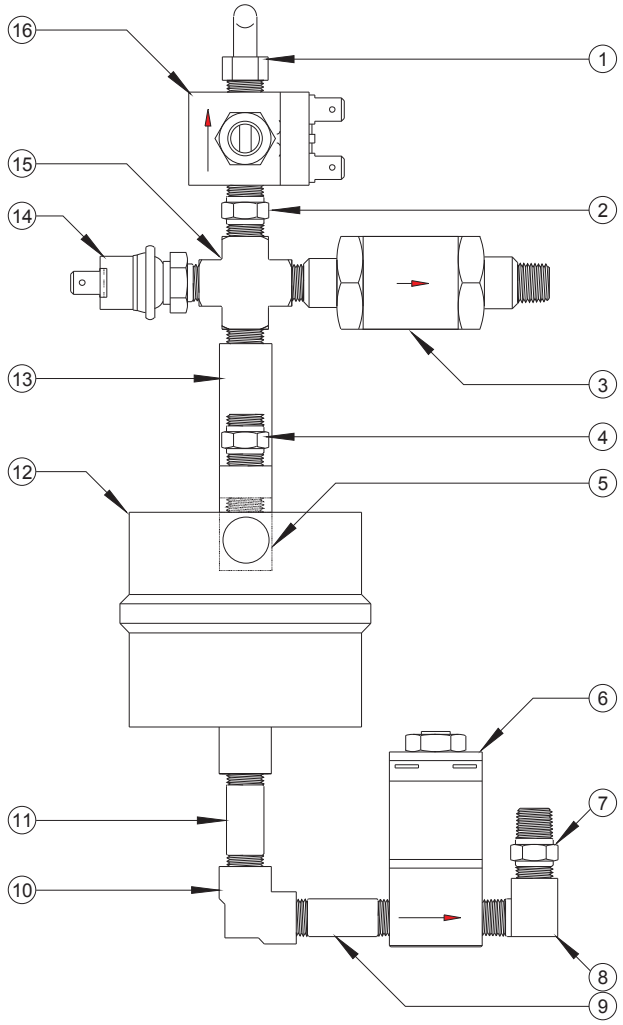

ITEM	DESCRIPTION	PART NUMBER
1	Elbow, Nylon Ribbed	0647-0108
2	Fitting, 1/8x1/8 Nipple	4982-0076-01
3	Valve, Check	4015-0029-01
4	Fitting, 1/8 npt x 7/16 Tubo	0647-0206-01
5	Elbow, Street	0647-0044
6	Solenoid, Oil	0304-0054-01
7	Fitting, 1/8 npt x 7/16 Tubo	0647-0206-01
8	Elbow, Street	0647-0044
9	Fitting, 1/8x1-1/2 Nipple	0647-0192-01
10	Elbow, 1/8 Female	0647-0300-01
11	Fitting, 1/8x1-1/2 Nipple	0647-0192-01
12	Separator, Oil	0111-0907-01
13	Fitting, 1/8x2-1/2 Nipple	4982-0075-01
14	Switch, High Pressure	0549-0036-02
15	Fitting, 1/8 Fem. Cross	0647-0212-01
16	Solenoid, Vent	0304-0054-01

PANZITTA SALES & SERVICE
72 George Avenue
Wilkes-Barre, PA 18705
570-822-6720 800-822-6720
www.panzittasales.com

PANZITTA SALES & SERVICE
72 George Avenue
Wilkes-Barre, PA 18705
570-822-6720 800-822-6720
www.panzittasales.com

PURGE/LIQUID SOLENOID ASSEMBLY

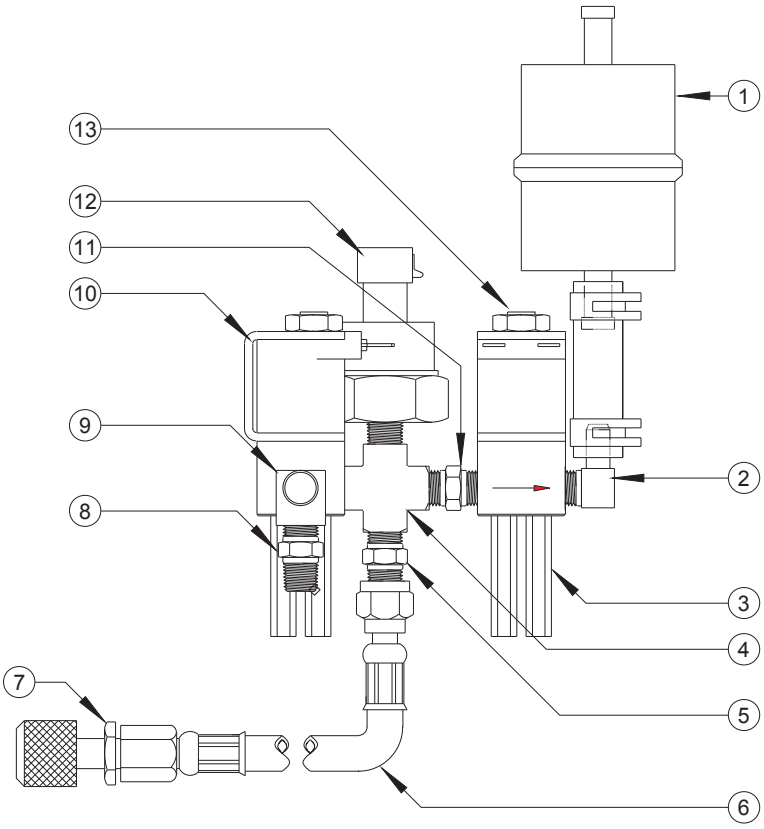

ITEM	DESCRIPTION	PART NUMBER	ITEM	DESCRIPTION	PART NUMBER
1	Filter, Gas	0301-0119	7b	Valve, R-134a Anti-Blow Back	4719-0055-02
2	Fitting, Elbow	0647-0104	8	Fitting, 1/8 npt x7/16 Tubo	0647-0206-01
3	Post, Solenoid Hex	0429-0039-09	9	Elbow, Street	0647-0044
4	Fitting, 1/8 Fem. Cross	0647-0212-01	10	Solenoid, Liquid	0304-0054-01
5	Fitting, 1/8 nptx7/16 Tubo	0647-0206-01	11	Fitting, 1/8x1/8 Nipple	4982-0076-01
6a	Hose, R-12 RED	3988-0303-02	12	Transducer, Purge	0514-0035-01
6b	Hose, R-134a RED	3988-0284-02	13	Solenoid, Purge	0304-0056-01
7a	Valve, R-12 Anti-Blow Back	4719-0055-01			

PANZITTA SALES & SERVICE
72 George Avenue
Wilkes-Barre, PA 18705
570-822-6720 800-822-6720
www.panzittasales.com

CHARGE SOLENOID ASSEMBLY

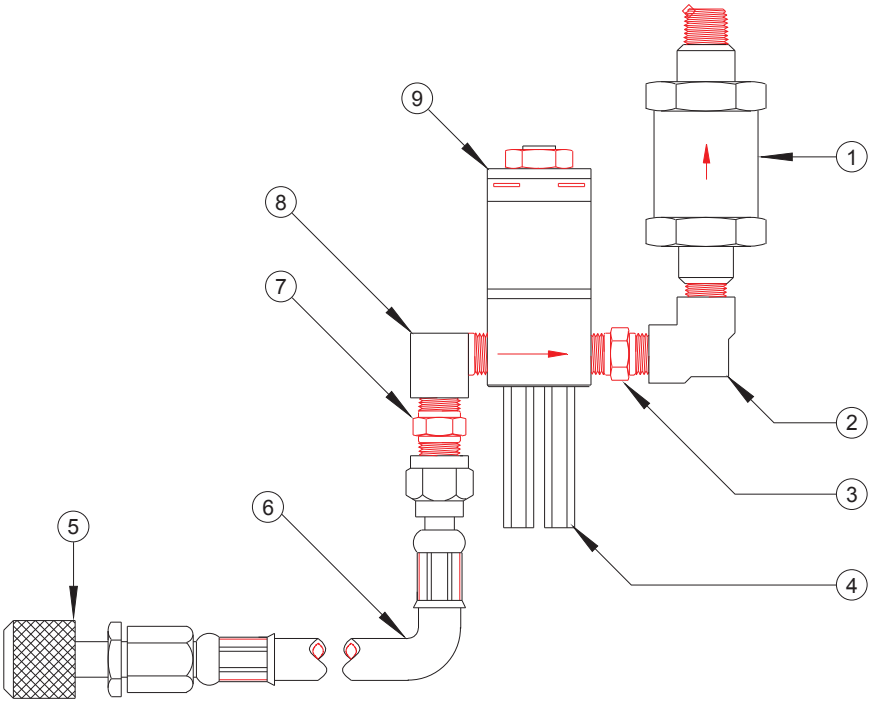

ITEM	DESCRIPTION	PART NUMBER	ITEM	DESCRIPTION	PART NUMBER
1	Valve, Check	4015-0029-01	6a	Hose, R-12 BLUE	3988-0304-04
2	Elbow, 1.8 Female	0647-0300-01	6b	Hose, R-134a BLUE	3988-0285-04
3	Fitting, 1/8x1/8 Nipple	4982-0076-01	7	Fitting, 1/8 npt x7/16 Tubo	0647-0206-01
4	Post, Solenoid Hex	0429-0039-09	8	Elbow, Street	0647-0044
5a	Valve, R-12 Anti-Blow Back	4719-0055-01	9	Solenoid, Charge	0304-0054-01
5b	Valve, R-134a Anti-Blow Back	4719-0055-02			

PANZITTA SALES & SERVICE
72 George Avenue
Wilkes-Barre, PA 18705
570-822-6720 800-822-6720
www.panzittasales.com

SEPARATOR/BYPASS SOLENOID ASSEMBLY

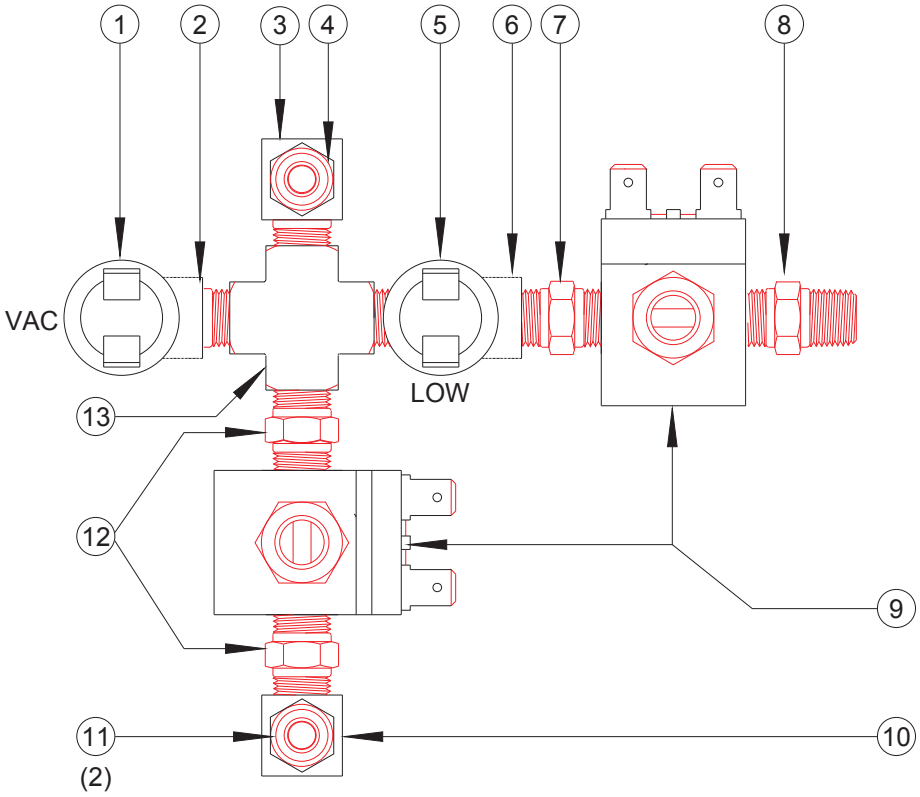

ITEM	DESCRIPTION	PART NUMBER	ITEM	DESCRIPTION	PART NUMBER
1	Switch, Vacuum	0549-0037-01	8	Fitting, 1/8 npt x7/16 Tubo	0647-0206-01
2	Elbow, Street	0647-0044	9a	Solenoid, Bypass (left)	0304-0054-01
3	Elbow, Street	0647-0044	9b	Solenoid, Separator (upper)	0304-0066-01
4	Fitting, 1/8 npt x 7/16 Tubo	0647-0206-01	10	Fitting, 1/8 Tee	0647-0209-01
5	Switch, Low Pressure	0549-0035-01	11	Fitting, 1/8 npt x7/16 Tubo	0647-0206-01
6	Fitting, 1/8mx1/8f Tee	0647-0208-01	12	Fitting, 1/8x1/8 Nipple	4982-0076-01
7	Fitting, 1/8x1/8 Nipple	4982-0076-01	13	Fitting, 1/8 Fem. Cross	0647-0212-01

PANZITTA SALES & SERVICE
72 George Avenue
Wilkes-Barre, PA 18705
570-822-6720 800-822-6720
www.panzittasales.com

OIL CHARGE ASSEMBLY (ENHANCED)

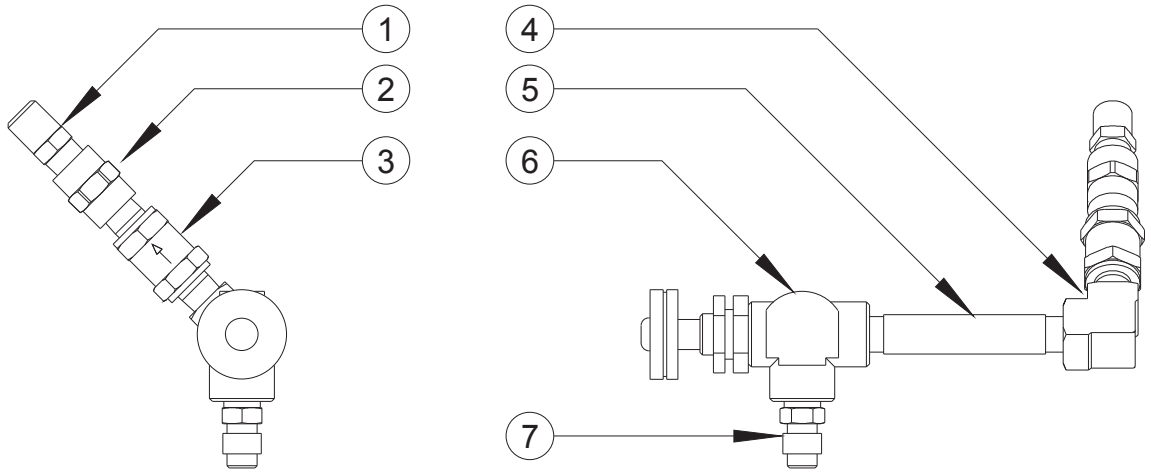

ITEM	DESCRIPTION	PART NUMBER	ITEM	DESCRIPTION	PART NUMBER
1	Fitting, 1/8 npt x7/16 Tubo	0647-0206-01	5	Fitting, 1/8x2-1/2 Nipple	4982-0075-01
2	Coupling	0647-0229-01	6	Valve, Oil Charge	1-3581
3	Valve, 1/3 PSI Check	1-3981	6a	Knob, Oil Charge	Not Available
4	Elbow, 1/8 Female	0647-0300-01	7	Adapter, 1/8 x ¼ Flare	0647-0134

PANZITTA SALES & SERVICE
72 George Avenue
Wilkes-Barre, PA 18705
570-822-6720 800-822-6720
www.panzittasales.com

UNIWELD GAUGE SET (W/OLD STYLE HOSES)

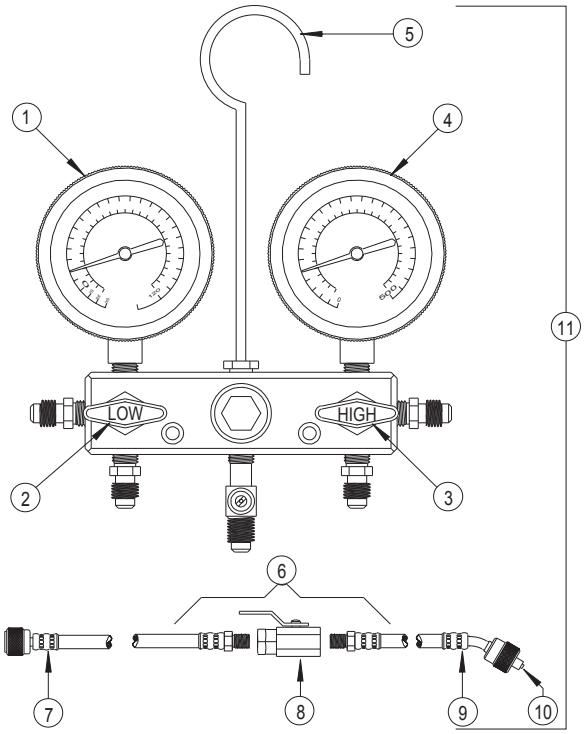

ITEM	DESCRIPTION	PART NUMBER FOR R-12	PART NUMBER FOR R-134a
1	Gauge, Low Side	EAH0013C03A	EAH0014C08A
a	Bezel	EAH0013C07A	EAH0013C07A
2a	Handle Assy., Low	EAH0013C04A	EAH0013C04A
2b	Seat Assy.	EAH0014C04A	EAH0014C04A
2c	Seal Kit	EAK0017C00A	EAK0017C00A
3a	Handle Assy., High	EAH0013C05A	EAH0013C05A
3b	Seat Assy.	EAH0014C04A	EAH0014C04A
3c	Seal Kit	EAK0017C00A	EAK0017C00A
4	Gauge, High Side	EAH0013C02A	EAH0014C07A
a	Bezel	EAH0013C07A	EAH0013C07A
5	Hook & Nut Assy.	EAH0013C01A	EAH0013C01A
6a	Hose Assy. with Valve, Blue	EAH0013C10A	N/A
6b	Hose Assy. with Valve, Red	EAH0013C08A	N/A
6c	Hose Assy. with Valve, Yellow	EAH0013C09A	EAH0014C09A
7a	Hose, 65" Blue	EAH0013C06A	N/A
7b	Hose, 72" Blue	N/A	EAH0014C11A
7c	Hose, 65" Red	EAH0013C16A	N/A
7d	Hose, 72" Red	N/A	EAH0014C10A
7e	Hose, 65" Yellow	EAH0013C15A	N/A
8	Valve, Ball	EAH0013C11A	EAH0013C11A
9a	Hose, 6" Blue	EAH0013C14A	N/A
9b	Hose, 6" Red	EAH0013C12A	N/A
9c	Hose, 6" Yellow	EAH0013C13A	EAH0014C05A
10	Seal Kit, Hoses	EAK0053C01AB	EAK0053C02AB
11	Gauge Set W/Hoses	EAH0013C00A	EAH0014C01A

PANZITTA SALES & SERVICE
72 George Avenue
Wilkes-Barre, PA 18705
570-822-6720 800-822-6720
www.panzittasales.com

UNIWELD GAUGE SET (W/NEW STYLE HOSES)

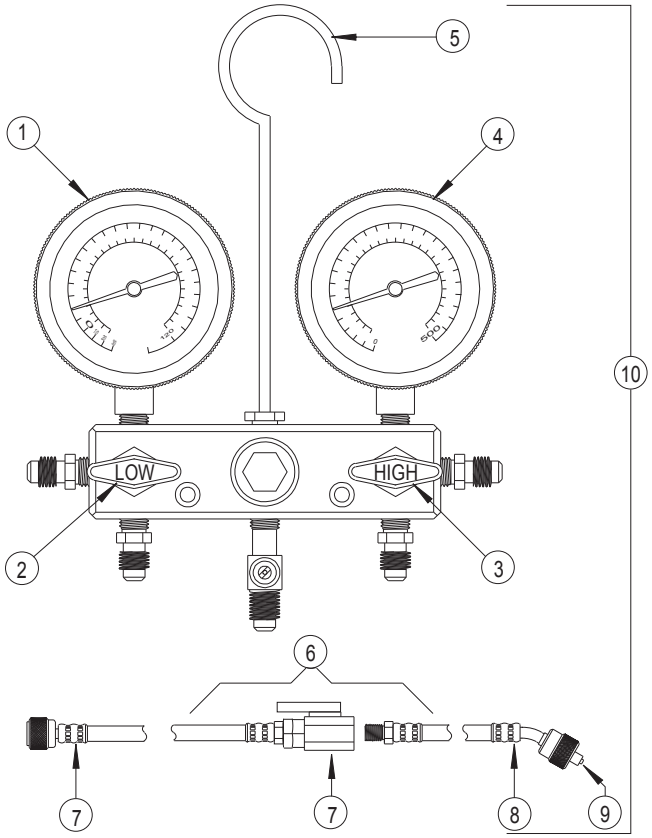

ITEM	DESCRIPTION	PART NUMBER FOR R-12	PART NUMBER FOR R-134a
1	Gauge, Low Side	EAH0013C03A	EAH0014C08A
a	Bezel	EAH0013C07A	EAH0013C07A
2a	Handle Assy., Low	EAH0013C04A	EAH0013C04A
2b	Seat Assy.	EAH0014C04A	EAH0014C04A
2c	Seal Kit	EAK0017C00A	EAK0017C00A
3a	Handle Assy., High	EAH0013C05A	EAH0013C05A
3b	Seat Assy.	EAH0014C04A	EAH0014C04A
3c	Seal Kit	EAK0017C00A	EAK0017C00A
4	Gauge, High Side	EAH0013C02A	EAH0014C07A
a	Bezel	EAH0013C07A	EAH0013C07A
5	Hook & Nut Assy.	EAH0013C01A	EAH0013C01A
6a	Hose Assy. with Valve, Blue	EAH0013C10B	-
6b	Hose Assy. with Valve, Red	EAH0013C08B	-
6c	Hose Assy. with Valve, Yellow	EAH0013C09B	EAH0014C09B
7a	Hose, 65" Blue, with Valve	EAH0013C06B	-
7b	Hose, 72" Blue	-	EAH0014C11A
7c	Hose, 65" Red, with Valve	EAH0013C16B	-
7d	Hose, 72" Red	-	EAH0014C10A
7e	Hose, 65" Yellow, with Valve	EAH0013C15B	-
8a	Hose, 6" Blue	EAH0013C14B	-
8b	Hose, 6" Red	EAH0013C12B	-
8c	Hose, 6" Yellow	EAH0013C13B	EAH0014C05B
9	Kit, Hose Repair	EAK0053C01AB	EAK0053C02AB
10	Gauge Set W/Hoses	EAH0013C00A	EAH0014C01A

PANZITTA SALES & SERVICE
72 George Avenue
Wilkes-Barre, PA 18705
570-822-6720 800-822-6720
www.panzittasales.com

ACCESSORIES

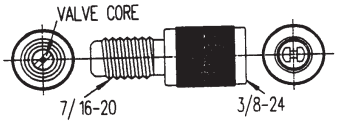

1

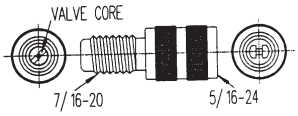

2

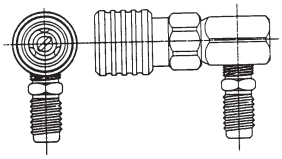

3

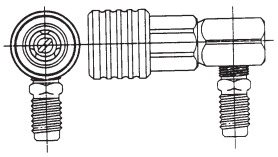

4

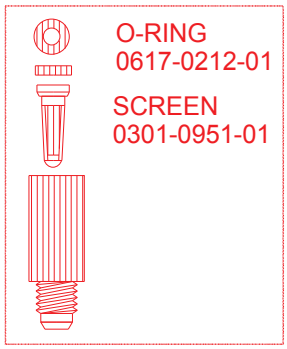

5

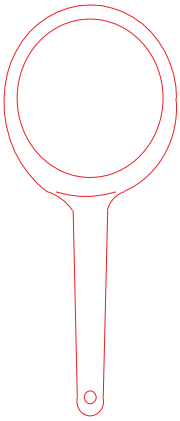

6

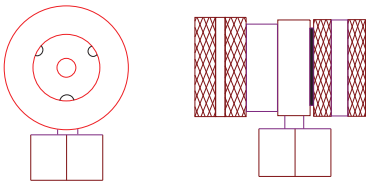

7

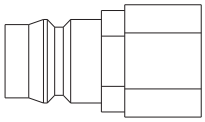

8

ITEM	DESCRIPTION	PART NUMBER	ITEM	DESCRIPTION	PART NUMBER
1	GM Adapter	0647-0196-01	7a	R-134a Adapter, High	0647-0287-07
2	Ford Adapter	0647-0200-01	7b	R-134a Adapter, Low	0647-0287-08
3	Large GM Adapter	0647-0199-01	7c	O-Ring Kit, R-134a Adapters	ARG04040
4	GM/Ford	0647-0197-01	8	Adapter, R-134a Tank	115080
5	Inline Filter, R-12	7009-2417-01	**NS**	Video, SUN	0692-2393-01
5a	Inline Filter, R-134a	7009-2418-01	**NS**	Video, Snap-on	0692-2392-01
6	Wrench, Filter	0001-0067-01			

PANZITTA SALES & SERVICE
72 George Avenue
Wilkes-Barre, PA 18705
570-822-6720 800-822-6720
www.panzittasales.com

RECOVERY TANK ASSEMBLY

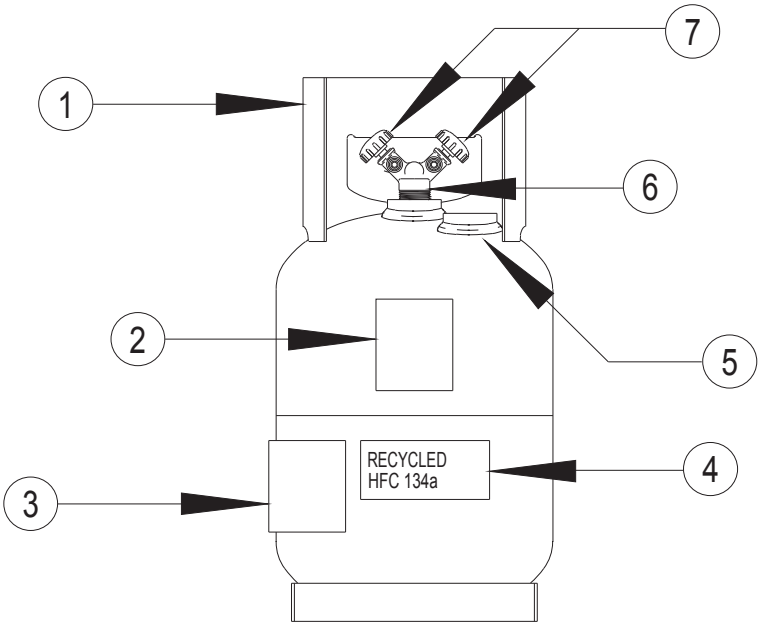

ITEM	DESCRIPTION	PART NUMBER	ITEM	DESCRIPTION	PART NUMBER
1a	Tank, R-12 Recovery	7009-2447-03	4b	Label, Recycled R-12	EAL0137C00A
1b	Tank, R-134a Recovery	7009-2447-01	5	Plug, Tank	Not Available
2	Label, Tank Use	EAL0036C00A	6	Valve, Tank	Not Available
3	Label, Valve	EAL0037C00A	7	Knobs, Tank Valve	Not Available
4a	Label, Recycled R-134a	EAL0138C00A			

PANZITTA SALES & SERVICE
72 George Avenue
Wilkes-Barre, PA 18705
570-822-6720 800-822-6720
www.panzittasales.com

HOSES & TUBING (STANDARD)

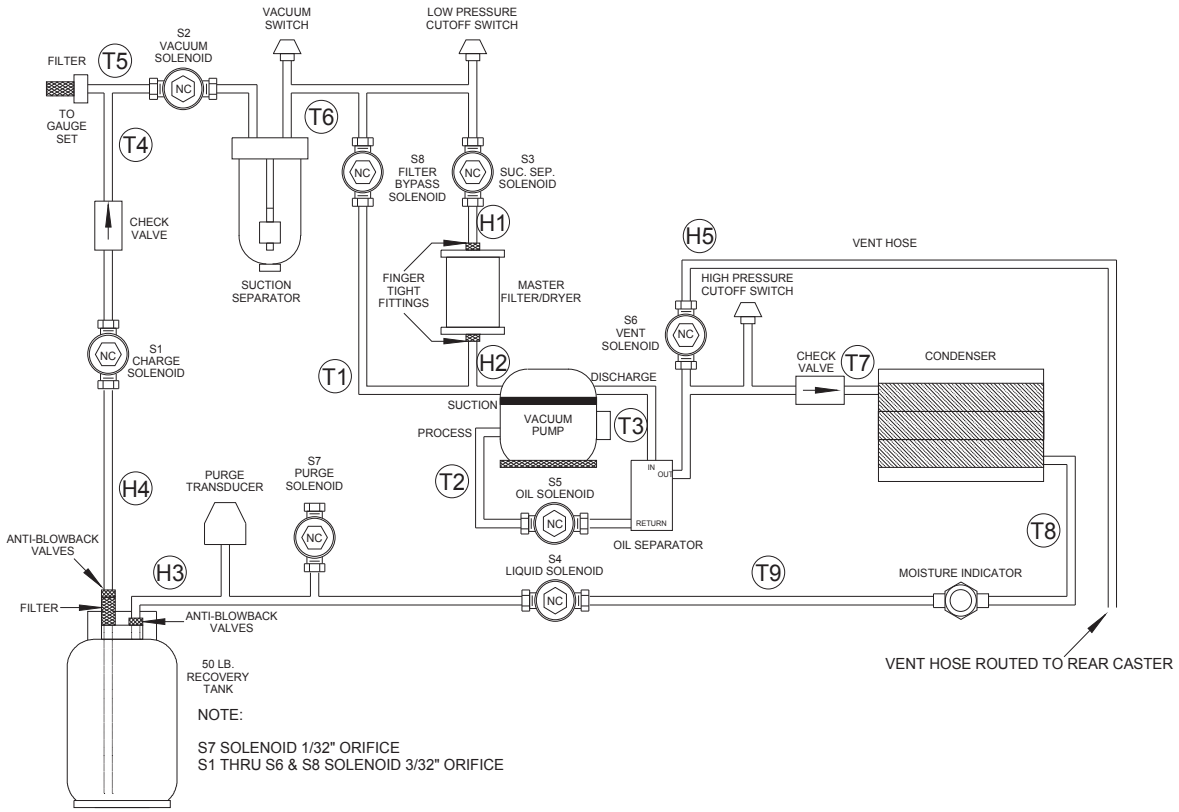

ITEM	DESCRIPTION	PART NUMBER	ITEM	DESCRIPTION	PART NUMBER
T1	Tube, Suction of Pump	EAH0002C00A	H1	Hose, BLUE Master Filter	EAH0011C00A
T2	Tube, Oil Return	EAH0003C00A	H2	Hose, BLUE Master Filter	EAH0011C00A
T3	Tube, Discharge of Pump	EAH0004C00A	H3	Hose, R-12 RED	3988-0303-02
T4	Tube, Charge	EAH0005C00A	H3	Hose, R-134a RED	3988-0284-02
T5	Tube, Vacuum	EAH0006C00A	H4	Hose, R-12 BLUE	3988-0304-04
T6	Tube, Separator	EAH0007C00A	H4	Hose, R-134a BLUE	3988-0285-04
T7	Tube, Input of Condenser	EAH0008C00A	H5	Hose, 48” Vent	0669-0229
T8	Tube, Output of Condenser	EAH0009C00A			
T9	Tube, Output of Moisture Indicator	EAH0010C00A			

PANZITTA SALES & SERVICE
72 George Avenue
Wilkes-Barre, PA 18705
570-822-6720 800-822-6720
www.panzittasales.com

HOSES & TUBING (ENHANCED)

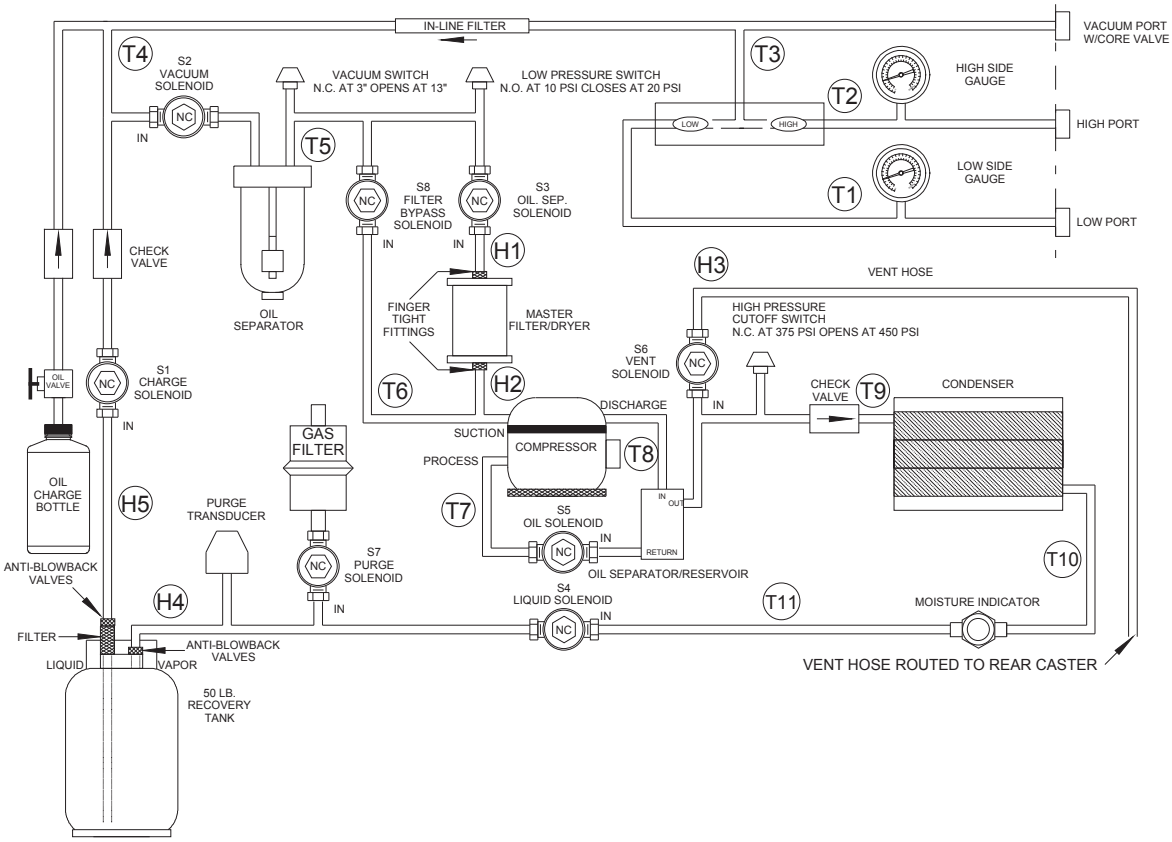

ITEM	DESCRIPTION	PART NUMBER	ITEM	DESCRIPTION	PART NUMBER
T1	Tube, Low Port	EAH0031L12A	H1	Hose, BLUE Master Filter	EAH0011C00A
T2	Tube, High Port	EAH0031L13A	H2	Hose, BLUE Master Filter	EAH0011C00A
T3	Tube, Vacuum Port	EAH0031L14A	H3	Hose, 48” Vent	0669-0229
T4	Tube, Vac./Charge	EAH0031L16A	H4	Hose, R-134a RED	3988-0284-02
T5	Tube, Separator	EAH0007C00A	H5	Hose, R-134a BLUE	3988-0285-04
T6	Tube, Suction of Pump	EAH0002C00A	**NS**	Filter, Inline Vacuum/Charge	EAA0207L00A
T7	Tube, Oil Return	EAH0003C00A			
T8	Tube, Discharge of Pump	EAH0004C00A			
T9	Tube, Input of Condenser	EAH0008C00A			
T10	Tube, Output of Condenser	EAH0009C00A			
T11	Tube, Output of Moisture Indicator	EAH0010C00A			

PANZITTA SALES & SERVICE
72 George Avenue
Wilkes-Barre, PA 18705
570-822-6720 800-822-6720
www.panzittasales.com

PLASTIC SEPARATOR BOWL

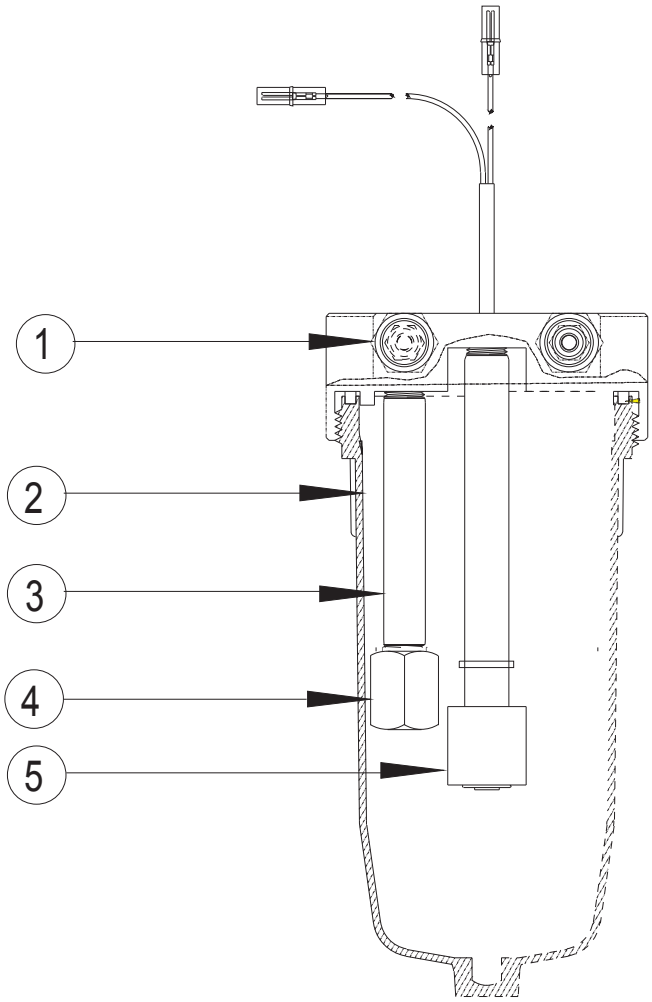

ITEM	DESCRIPTION	PART NUMBER	ITEM	DESCRIPTION	PART NUMBER
1	Fitting, Adapter	0647-0221-01	4	Fitting, Inlet Diffuser	7024-0511-01
2	Bowl, Separator	OBSOLETE	5	Switch, Float	0546-0018-01
3	Tube, Separator Inlet	4982-0074-01			

PANZITTA SALES & SERVICE
72 George Avenue
Wilkes-Barre, PA 18705
570-822-6720 800-822-6720
www.panzittasales.com

METAL SEPARATOR BOWL

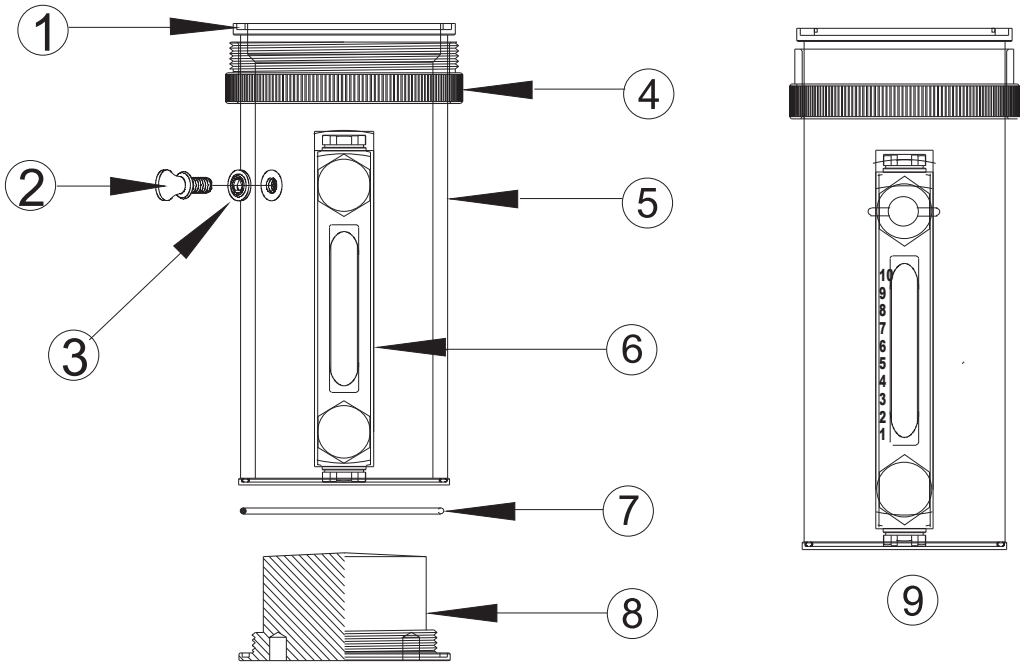

ITEM	DESCRIPTION	PART NUMBER	ITEM	DESCRIPTION	PART NUMBER
1	Gasket	4053-0020-01	6	Gauge, Liquid Level	0330-0010-01
2	Thumbscrew	0938-0158-01	7	O-Ring, Bottom of Bowl	0617-0220-01
3	Washer	0400-5605-01	8	Bowl, Bottom Cap	0382-0514-01
4	Ring, Mounting Bowl	0382-0512-01	9a	Bowl Kit, Metal (Bowl, Gasket & Super-lube)	EAK0071C00AS
5	Bowl, Separator	0382-0513-01			

PANZITTA SALES & SERVICE
72 George Avenue
Wilkes-Barre, PA 18705
570-822-6720 800-822-6720
www.panzittasales.com

PARTS IN ALPHABETICAL ORDER

DESCRIPTION	PART NUMBER	R-12 KOOL KARE	R-134a KOOL KARE	COMMENTS
Adapter, Ford	0647-0200-01	X	-	
Adapter, GM	0647-0196-01	X	-	
Adapter, GM/Ford	0647-0197-01	X	-	
Adapter, High	0647-0287-09	-	X	
Adapter, Large GM	0647-0199-01	X	-	
Adapter, Low	0647-0287-10	-	X	
Adapter, Virgin tank	1-15080			
Beeper, Alarm	0316-0205-01	X	X	
Bezel	EAH0013C07A	X	X	
Board, CPU	EAP0063C06A	X	X	Without LCD Board (Serial A)
Board, CPU	EAP0063C05A	X	X	With Low Temp LCD (Serial A)
Board, CPU	EAP0063C00A	X	X	With High Temp LCD (Serial A)
Board, CPU	EAP0063C07A	X	X	With Low Temp LCD (Serial B 134a)
Board, CPU	EAP0152L00A	X	X	R12/134a / Serial B & C w/Low Temp
Board, CPU	EAP0152L10A	X	X	R134a / Serial D w/LCD
Board, LCD	EAP0082C00A	X	X	High Temp Board
Board, LCD	EAP0082C05A	X	X	Low Temp Board
Board, Plumbing	7001-2284-01	X	X	All Serial A Units and R134a Serial B Units
Board, Plumbing	EAP0151L00A	X	X	Serial B R12, Serial C /D R134a (Redundant Circuitry)
Bowl, Bottom Cap	0382-0514-01	X	X	Used on silver metal Bowl
Bowl, Kit	EAK0071C00AS	X	X	(Black Bowl, Gasket & Super-lube)
Bowl, Separator	0382-0009-02	X	X	Plastic
Bowl, Separator	0382-0513-01	X	X	Metal
Bracket, Gauge	7012-1537-02	X	X	Snap-on Model
Bushing, Heyco	2035-0008	X	X	
Cabinet, Lower	EASB021A00A	X	X	
Cap Assy.	7009-2452-01	X	X	Suppression
Cap, End	4312-5007-01	X	-	For bulkhead fitting
Cap, End	4312-5010-01	-	X	For bulkhead fitting
Cap, Start	0303-0109-09	X	X	
Caster w/o Brake	3645-0055-01	X	X	
Caster, with Brake	3645-0055-02	X	X	
Compressor Assy.	7009-2258-02	X	X	
Compressor Oil	EAK0029C0DAB			Change Kit
Condenser	0111-0706-01	X	X	
Cord, AC Power	6001-0191-01	X	X	110 Volt
Elbow, Female	0647-0300-01	X	X	1/8”
Elbow, Nylon Ribbed	0647-0108	X	X	
Elbow, Street	0647-0044	X	X	
Envelope, Clear	4211-0001-01	X	X	
Fan, Condenser	0587-0504	X	X	
Filter, 3 amp Line	0749-0219-01	X	X	
Filter, Gas	0301-0119	X	X	
Filter/Dryer Kit	EAK0030c01AB			
Fitting Nipple	4982-0076-01	X	X	1/8 x 1/8
Fitting, Cross	0647-0212-01	X	X	1/8 Fem.
Fitting, Tubo	0647-0206-01	X	X	1/8 npt x7/16

PANZITTA SALES & SERVICE
72 George Avenue
Wilkes-Barre, PA 18705
570-822-6720 800-822-6720
www.panzittasales.com

DESCRIPTION	PART NUMBER	R-12 KOOL KARE	R-134a KOOL KARE	COMMENTS
Fitting, Tee	0647-0209-01	X	X	1/8
Fitting, Tee	0647-0208-01	X	X	1/8mx1/8f
Fitting, Nipple	4982-0076-01	X	X	1/8x1/8
Fitting, Nipple	0647-0192-01	X	X	1/8x1-1/2
Fitting, Nipple	4982-0075-01	X	X	1/8x2-1/2
Fitting, Elbow	0647-0104	X	X	
Fitting, Inlet Dif.	7024-0511-01	X	X	Diffuser
Fuse, 1 amp (F2)	0739-0008	X	X	F2
Fuse, 3 amp (F1)	0739-0103	X	X	F1
Gauge Set w/Hoses	EAH0013C00A	X	-	Complete R-12 Gauge Set
Gauge Set w/Hoses	EAH0014C01A	-	X	Complete R-134a Gauge Set
Gauge, High Side	EAH0013C02A	X	-	R-12
Gauge, High Side	EAH0014C07A	-	X	R-134a
Gauge, High Side	8-2020			R-134a
Gauge, Liquid Level	0330-0010-01	X	X	Used on side of Metal Bowl
Gauge, Low Side	EAH0013C03A	X	-	R-12
Gauge, Low Side	EAH0014C08A	-	X	R-134a
Gauge, Low Side	8-2120			R-1324a
Guard, Scale	EASC035C00A	X	X	
Handle Assy., High	EAH0013C05A	X	X	
Handle Assy., Low	EAH0013C04A	X	X	
Hanger, AC Cord	7012-1369-03	X	X	
High Side Gauge	8-2020			
Hook & Nut Assy.	EAH0013C01A	X	X	
Hose	EAH0011L10A			
Hose, Blue	EAH0013C10A	X	-	Complete Set w/valve
Hose Red	EAH0013C08A	X	-	Complete Set w/valve
Hose, Yellow	EAH0013C09A	X	-	Complete Set w/valve
Hose, Yellow	EAH0014C09A	-	X	Complete Set w/valve
Hose, 48”	0669-0229	X	X	Vent
Hose, 6" Blue	EAH0013C14A	X	-	Used with Metal Ball Valve
Hose, 6" Blue	EAH0013C14B	X	-	Used with Plastic Ball Valve
Hose, 6" Red	EAH0013C12A	X	-	Used with Metal Ball Valve
Hose, 6" Red	EAH0013C12B	X	-	Used with Plastic Ball Valve
Hose, 6" Yellow	EAH0013C13A	X	-	Used with Metal Ball Valve
Hose, 6" Yellow	EAH0013C13B	X	-	Used with Plastic Ball Valve
Hose, 6" Yellow	EAH0014C05A	-	X	Used with Metal Ball Valve
Hose, 6" Yellow	EAH0014C05B	-	X	Used with Plastic Ball Valve
Hose, 65" Blue	EAH0013C06A	X	-	Used with Metal Ball Valve
Hose, 65" Blue	EAH0013C06B	X	-	Used with Plastic Ball Valve
Hose, 65" Red	EAH0013C16A	X	-	Used with Metal Ball Valve
Hose, 65" Red	EAH0013C16B	X	-	Used with Plastic Ball Valve
Hose, 65" Yellow	EAH0013C15A	X	-	Used with Metal Ball Valve
Hose, 65" Yellow	EAH0013C15B	X	-	Used with Plastic Ball Valve
Hose, 72" Blue	EAH0014C11A	-	X	Used with Vehicle Adapters
Hose, 72" Red	EAH0014C10A	-	X	Used with Vehicle Adapters
Hose, Blue	3988-0285-04	-	X	Liquid Side of Recovery Tank
Hose, Blue	3988-0304-04	X	-	Liquid Side of Recovery Tank
Hose, Blue	EAH0011C00A	X	X	Master Filter
Hose, Blue	EAH0013C10A	X	-	Complete Assy. (metal ball valve)
Hose, Blue	EAH0013C10B	X	-	Complete Assy. (plastic ball valve)
Hose, Red	3988-0284-02	-	X	Vapor Side of Recovery Tank
Hose, Red	3988-0303-02	X	-	Vapor Side of Recovery Tank
Hose, Red	EAH0013C08A	X	-	Complete Assy. (metal ball valve)

PANZITTA SALES & SERVICE
72 George Avenue
Wilkes-Barre, PA 18705
570-822-6720 800-822-6720
www.panzittasales.com

DESCRIPTION	PART NUMBER	R-12 KOOL KARE	R-134a KOOL KARE	COMMENTS
Hose, Red	EAH0013C08B	X	-	Complete Assy. (plastic ball valve)
Hose, Yellow	EAH0013C09A	X	-	Complete Assy. (metal ball valve)
Hose, Yellow	EAH0013C09B	X	-	Complete Assy. (plastic ball valve)
Hose, Yellow	EAH0014C09A	-	X	Complete Assy. (metal ball valve)
Hose, Yellow	EAH0014C09B	-	X	Complete Assy. (plastic ball valve)
Indicator, Moisture	7009-2105-02	X	X	
Inline Filter	7009-2417-01	X	-	
Inline Filter	7009-2418-01	-	X	
Kit, Master Filter	EAK0030C01AB	X	-	Filter, and O-ring
Kit, Moisture Indicator	EAK0016C00A	X	X	Indicator, and O-ring
Label	EAL0036C00A	X	X	First time usage
Label	EAL0037C00A	X	X	Tank Valve Shut-off
Label	EAL0067C00A	X	X	Warnings
Label	EAL0137C00A	X	-	Recycled R-12
Label	EAL0138C00A	-	X	Recycled R-134a
Label	EAL0167C00A	X	X	SUN Model
Label	EAL0168C00A	X	X	Snap-on Model
Label	EAL0169C00A	X	-	SUN Model, R-12 Kool Kare
Label	EAL0170C00A	-	X	SUN Model, R-134a Kool Kare
Label	EAL0171C00A	X	-	Snap-on Model, R-12 Kool Kare
Label	EAL0172C00A	-	X	Snap-on Model, R-134a Kool Kare
Label	EAL0192C00A	X	X	Service Maintenance
Lens, Gauge	8-1212	X	X	Enhanced Units Only!
Load Cell Assy.	EAA0090C00A	X	X	
Low Side Gauge	8-2120			
Mat, 21” x 12”	7019-0085-08	X	X	Snap-on Model
Mat, 21” x 9”	7019-0085-07	X	X	SUN Model
Nipple, Bulkhead	0647-0284-01	X	-	
Nipple, Bulkhead	0647-0286-01	-	X	
Oil Charge Bottle	1-585			
O-Ring Kit	ARG04040	-	X	For R-134a Vehicle Adapters -09/-10
O-Ring Repair Kit	EAK0027C00AS			Service Coupler
O-Ring, Bottom of Bowl	0617-0220-01	X	X	Used on Metal Bowl
Panel, Lower Back	EASB057C15A	X	X	SUN Model
Panel, Lower Back	EASB058C15A	X	X	Snap-on Model
Panel, Upper Back	EASB056C15A	X	X	SUN Model
Panel, Upper Back	EASD056C15A	X	X	SUN Model, Gauge Set Bracket included.
Panel, Upper Control	EASD056C00A	X	X	SUN Model
Panel, Upper Tray	EASB058C00A	X	X	Snap-on Model
Panel, Upper Tray	EASD0057C00A	X	X	SUN Model
Particle Filter	7009-2418-01		X	
Plate, Scale Top	7003-0727-01	X	X	
Plug	1374-0031	X	-	SUN Model, Corner of unit
Post, Solenoid Hex	0429-0039-09	X	X	
Relay, External Pump	0783-0352-01	X	X	
Relay, 24 volt	0783-0352-01			Optional Vacuum pump
Ring, Mounting Bowl	0382-0512-01	X	X	Used on Metal Bowl
Rubber, Foot	1489-0017-01	X	X	
Scale Assy.	7009-2456-01	X	X	
Seal Kit	EAK0017C00A	X	X	For R-12 and R-134a
Seal Kit, Hoses	EAK0053C01AB	X	-	Uniweld Hoses
Seal Kit, Hoses	EAK0053C02AB	-	X	Uniweld Hoses

PANZITTA SALES & SERVICE
72 George Avenue
Wilkes-Barre, PA 18705
570-822-6720 800-822-6720
www.panzittasales.com

DESCRIPTION	PART NUMBER	R-12 KOOL KARE	R-134a KOOL KARE	COMMENTS
Seat Assy.	EAH0014C04A	X	X	
Sensor, Temperature	7009-2405-01	X	X	
Separator, Oil	0111-0907-01	X	X	
Service Coupler,high	1-27180	X	X	Used on Metal Bowl
Service Coupler, low	1-27280	X	X	SUN, Covers both Refrigerants
Hose, Blue	EAH0001C02A	X	X	Quantity 2
Hose, Red	EAH0001C01A	X	X	Snap-on, Covers both Refrigerants
Solenoid	0304-0054-01	X	X	All other Solenoids but Purge/Sep.
Solenoid	0304-0056-01	X	X	Purge Solenoid
Solenoid	0304-0066-01	X	X	Separator Solenoid
Strap, Tank Velcro	0424-0805-01	X	X	Left Strap
Strap, Tank Velcro	0424-0806-02	X	X	Right Strap
Strap, Velcro	0424-0807-01	X	X	For Master Filter
Switch, Float	0546-0018-01	X	X	
Switch, High Pres.	0549-0036-01	X	X	
Switch, Low Pres.	0549-0035-01	X	X	
Switch, On/Off	1922-0118-01	X	X	
Switch, Maintance	0764-0254-01	X	X	Service Maintance
Switch, Vacuum	0549-0037-01	X	X	
Tank, Recovery	7009-2447-01	-	X	R-134a
Tank, Recovery	7009-2447-03	X	-	R-12
Thumbscrew	0938-0158-01	X	X	Used on Metal Bowl
Transducer, Purge	0514-0035-01	X	X	Black Kalvico
Transformer, 24 volt	0778-0486-01	X	X	
Tray, Storage	EAC0031C00A	X	X	SUN Model
Tray, Storage	EAC0032C00A	X	X	Snap-on Model
Tube	4982-0074-01	X	X	Separator Inlet
Tube	EAH0002C00A	X	X	Suction of Pump
Tube	EAH0003C00A	X	X	Oil Return
Tube	EAH0004C00A	X	X	Discharge of Pump
Tube	EAH0005C00A	X	X	Charge
Tube	EAH0006C00A	X	X	Vacuum
Tube	EAH0007C00A	X	X	Separator
Tube	EAH0008C00A	X	X	Input of Condenser
Tube	EAH0009C00A	X	X	Output of Condenser
Tube	EAH0010C00A	X	X	Output of Moisture Indicator
Unit Cover	EAC301ACV	X	X	
Vacuum Pump	EAK0227L00A			5 CFM Pump, ½ H. P.
Vacuum, Pump	EAK0227L01A			Quart
Valve, ABB	4719-0055-01	X	-	R-12, Anti-Blow Back
Valve, ABB	4719-0055-02	-	X	R-134a, Anti-Blow Back
Valve, Ball	EAH0013C11A	X	X	
Valve, Check	4015-0029-01	X	X	
Varistors (1)	7009-1320	X	X	Quantity 1

PANZITTA SALES & SERVICE
72 George Avenue
Wilkes-Barre, PA 18705
570-822-6720 800-822-6720
www.panzittasales.com

PARTS IN NUMERICAL ORDER

PART NUMBER	DESCRIPTION	R-12 KOOL KARE	R-134a KOOL KARE	COMMENTS
0111-0706-01	Condenser	X	X	
0111-0907-01	Separator, Oil	X	X	
0183-1441-06	Relay, 24 volt		X	Optional Vacuum pump
0301-0119	Filter, Gas	X	X	
0303-0109-09	Cap, Start	X	X	
0304-0054-01	Solenoid	X	X	All other Solenoids but Purge/Sep.
0304-0056-01	Solenoid	X	X	Purge Solenoid
0304-0066-01	Solenoid	X	X	Separator Solenoid
0316-0205-01	Beeper, Alarm	X	X	
0330-0010-01	Gauge, Liquid Level	X	X	Used on side of Metal Bowl
0382-0009-02	Bowl, Separator	X	X	Plastic
0382-0512-01	Ring, Mounting Bowl	X	X	Used on Metal Bowl
0382-0513-01	Bowl, Separator	X	X	Metal
0382-0514-01	Bowl, Bottom Cap	X	X	Used on Metal Bowl
0424-0805-01	Strap, Tank Velcro	X	X	Left Strap
0424-0806-01	Strap, Tank Velcro	X	X	Right Strap
0424-0807-01	Strap, Velcro	X	X	For Master Filter
0429-0039-09	Post, Solenoid Hex	X	X	
0514-0035-01	Transducer, Purge	X	X	Black Kalvico
0546-0018-01	Switch, Float	X	X	
0549-0035-01	Switch, Low Pressure	X	X	
0549-0036-01	Switch, High Pressure	X	X	
0549-0037-01	Switch, Vacuum	X	X	
0587-0504	Fan, Condenser	X	X	
0617-0220-01	O-Ring, Bottom, Bowl	X	X	Used on Metal Bowl
0647-0044	Elbow, Street	X	X	
0647-0104	Fitting, Elbow	X	X	
0647-0108	Elbow, Nylon Ribbed	X	X	
0647-0192-01	Fitting, Nipple	X	X	1/8x1-1/2
0647-0196-01	Adapter, GM	X	-	
0647-0197-01	Adapter, GM/Ford	X	-	
0647-0199-01	Adapter, Large GM	X	-	
0647-0200-01	Adapter, Ford	X	-	
0647-0206-01	Fitting, Tubo	X	X	1/8 npt x7/16
0647-0208-01	Fitting, Tee	X	X	1/8mx1/8f
0647-0209-01	Fitting, Tee	X	X	1/8
0647-0212-01	Fitting, Cross	X	X	1/8 Fem.
0647-0284-01	Nipple, Bulkhead	X	-	
0647-0286-01	Nipple, Bulkhead	-	X	
0647-0287-09	Adapter, High	-	X	
0647-0287-10	Adapter, Low	-	X	
0647-0300-01	Elbow, Female	X	X	1/8”
0669-0229	Hose, 48”	X	X	Vent
0739-0008	Fuse, 1 amp (F2)	X	X	F2
0739-0103	Fuse, 3 amp (F1)	X	X	F1
0749-0219-01	Filter, 3 amp Line	X	X	
0764-0254-01	Switch, Maintance	X	X	Service Maintance
0778-0486-01	Transformer, 24 volt	X	X	
0783-0352-01	Relay, External Pump	X	X	
0938-0158-01	Thumbscrew	X	X	Used on Metal Bowl
1-15080	Adapter, Virgin tank		X	

PANZITTA SALES & SERVICE
72 George Avenue
Wilkes-Barre, PA 18705
570-822-6720 800-822-6720
www.panzittasales.com

PART NUMBER	DESCRIPTION	R-12 KOOL KARE	R-134a KOOL KARE	COMMENTS
1-27180	Service Coupler, high	X	X	Used on Metal Bowl
1-27280	Service Coupler, low	X	X	SUN, Covers both Refrigerants
1374-0031	Plug	X	-	SUN Model, Corner of unit
1489-0017-01	Rubber, Foot	X	X	
1-585	Oil Charge Bottle			
1922-0118-01	Switch, On/Off	X	X	
2035-0008	Bushing, Heyco	X	X	
3645-0055-01	Caster w/o Brake	X	X	
3645-0055-02	Caster, with Brake	X	X	
3988-0284-02	Hose, Red	-	X	Vapor Side of Recovery Tank
3988-0285-04	Hose, Blue	-	X	Liquid Side of Recovery Tank
3988-0303-02	Hose, Red	X	-	Vapor Side of Recovery Tank
3988-0304-04	Hose, Blue	X	-	Liquid Side of Recovery Tank
4015-0029-01	Valve, Check	X	X	
4211-0001-01	Envelope, Clear	X	X	
4312-5007-01	Cap, End	X	-	For bulkhead fitting
4312-5010-01	Cap, End	-	X	For bulkhead fitting
4719-0055-01	Valve, ABB	X	-	R-12, Anti-Blow Back
4719-0055-02	Valve, ABB	-	X	R-134a, Anti-Blow Back
4982-0074-01	Tube	X	X	Separator Inlet
4982-0075-01	Fitting, Nipple	X	X	1/8x2-1/2
4982-0076-01	Fitting Nipple	X	X	1/8 x 1/8
4982-0076-01	Fitting, Nipple	X	X	1/8x1/8
6001-0191-01	Cord, AC Power	X	X	110 Volt
7001-2284-01	Board, Plumbing	X	X	All serial A units & R134a Ser. B units
7003-0727-01	Plate, Scale Top	X	X	
7009-1320	Varistors (1)	X	X	Quantity 1
7009-2105-02	Indicator, Moisture	X	X	
7009-2258-02	Compressor Assy.	X	X	
7009-2405-01	Sensor, Temperature	X	X	
7009-2417-01	Inline Filter	X	-	R12
7009-2418-01	Inline Filter	-	X	
7009-2418-01	Particle Filter		X	R134a
7009-2447-01	Tank, Recovery	-	X	R-134a
7009-2447-03	Tank, Recovery	X	-	R-12
7009-2452-01	Cap Assy.	X	X	Suppression
7009-2456-01	Scale Assy.	X	X	
7012-1369-03	Hanger, AC Cord	X	X	
7012-1537-02	Bracket, Gauge	X	X	Snap-on Model
7019-0085-07	Mat, 21” x 9”	X	X	SUN Model
7019-0085-08	Mat, 21” x 12”	X	X	Snap-on Model
7024-0511-01	Fitting, Inlet Dif.	X	X	Diffuser
8-1212	Lens, Gauge	X	X	Enhanced Units Only!
8-2020	Gauge, High Side		X	R-134a
8-2120	Gauge, Low Side		X	R-134a
ARG04040	O-Ring Kit	-	X	For R-134a Vehicle Adapters -09/-10
EAA0090C00A	Load Cell Assy.	X	X	
EAC0031C00A	Tray, Storage	X	X	SUN Model
EAC0032C00A	Tray, Storage	X	X	Snap-on Model
EAC301ACV	Unit Cover			
EAH0001C01A	Hose, Red	X	X	Snap-on, Covers both Refrigerants
EAH0001C02A	Hose, Blue	X	X	Quantity 2
EAH0002C00A	Tube	X	X	Suction of Pump
EAH0003C00A	Tube	X	X	Oil Return
EAH0004C00A	Tube	X	X	Discharge of Pump
EAH0005C00A	Tube	X	X	Charge

PART NUMBER	DESCRIPTION	R-12 KOOL KARE	R-134a KOOL KARE	COMMENTS
EAH0006C00A	Tube	X	X	Vacuum
EAH0007C00A	Tube	X	X	Separator
EAH0008C00A	Tube	X	X	Input of Condenser
EAH0009C00A	Tube	X	X	Output of Condenser
EAH0010C00A	Tube	X	X	Output of Moisture Indicator
EAH0011C00A	Hose, Blue	X	X	Master Filter
EAH0011L10A	Hose			
EAH0013C00A	Gauge Set w/Hoses	X	-	Complete R-12 Gauge Set
EAH0013C01A	Hook & Nut Assy.	X	X	
EAH0013C02A	Gauge, High Side	X	-	R-12
EAH0013C03A	Gauge, Low Side	X	-	R-12
EAH0013C04A	Handle Assy., Low	X	X	
EAH0013C05A	Handle Assy., High	X	X	
EAH0013C06A	Hose, 65" Blue	X	-	Used with Metal Ball Valve
EAH0013C06B	Hose, 65" Blue	X	-	Used with Plastic Ball Valve
EAH0013C07A	Bezel	X	X	
EAH0013C08A	Hose Red	X	-	Complete Set w/valve
EAH0013C08A	Hose, Red	X	-	Complete Assy. (metal ball valve)
EAH0013C08B	Hose, Red	X	-	Complete Assy. (plastic ball valve)
EAH0013C09A	Hose, Yellow	X	-	Complete Set w/valve
EAH0013C09A	Hose, Yellow	X	-	Complete Assy. (metal ball valve)
EAH0013C09B	Hose, Yellow	X	-	Complete Assy. (plastic ball valve)
EAH0013C10A	Hose, Blue	X	-	Complete Set w/valve
EAH0013C10A	Hose, Blue	X	-	Complete Assy. (metal ball valve)
EAH0013C10B	Hose, Blue	X	-	Complete Assy. (plastic ball valve)
EAH0013C11A	Valve, Ball	X	X	
EAH0013C12A	Hose, 6" Red	X	-	Used with Metal Ball Valve
EAH0013C12B	Hose, 6" Red	X	-	Used with Plastic Ball Valve
EAH0013C13A	Hose, 6" Yellow	X	-	Used with Metal Ball Valve
EAH0013C13B	Hose, 6" Yellow	X	-	Used with Plastic Ball Valve
EAH0013C14A	Hose, 6" Blue	X	-	Used with Metal Ball Valve
EAH0013C14B	Hose, 6" Blue	X	-	Used with Plastic Ball Valve
EAH0013C15A	Hose, 65" Yellow	X	-	Used with Metal Ball Valve
EAH0013C15B	Hose, 65" Yellow	X	-	Used with Plastic Ball Valve
EAH0013C16A	Hose, 65" Red	X	-	Used with Metal Ball Valve
EAH0013C16B	Hose, 65" Red	X	-	Used with Plastic Ball Valve
EAH0014C01A	Gauge Set w/Hoses	-	X	Complete R-134a Gauge Set
EAH0014C04A	Seat Assy.	X	X	
EAH0014C05A	Hose, 6" Yellow	-	X	Used with Metal Ball Valve
EAH0014C05B	Hose, 6" Yellow	-	X	Used with Plastic Ball Valve
EAH0014C07A	Gauge, High Side	-	X	R-134a
EAH0014C08A	Gauge, Low Side	-	X	R-134a
EAH0014C09A	Hose, Yellow	-	X	Complete Set w/valve
EAH0014C09A	Hose, Yellow	-	X	Complete Assy. (metal ball valve)
EAH0014C09B	Hose, Yellow	-	X	Complete Assy. (plastic ball valve)
EAH0014C10A	Hose, 72" Red	-	X	Used with Vehicle Adapters
EAH0014C11A	Hose, 72" Blue	-	X	Used with Vehicle Adapters
EAK0016C00A	Kit, Moisture Indicator	X	X	Indicator, and O-ring
EAK0017C00A	Seal Kit	X	X	For R-12 and R-134a
EAK0027C00AS	O-Ring Repair Kit			Service Coupler
EAK0029C0DAB	Compressor Oil	X	X	Change Kit
EAK0030c01AB	Filter/Dryer Kit	X	X	
EAK0030C01AB	Kit, Master Filter	X	-	Filter, and O-ring
EAK0053C01A	Seal Kit, Hoses	X	-	Uniweld Hoses
EAK0053C02A	Seal Kit, Hoses	-	X	Uniweld Hoses
EAK0071C00AS	Bowl, Kit	X	X	(Black Bowl, Gasket & Super-lube)

PANZITTA SALES & SERVICE
72 George Avenue
Wilkes-Barre, PA 18705
570-822-6720 800-822-6720
www.panzittasales.com

PART NUMBER	DESCRIPTION	R-12 KOOL KARE	R-134a KOOL KARE	COMMENTS
EAK0227L00A	Vacuum Pump			5 CFM Pump, ½ H.P.
EAK0227L01A	Vacuum Pump Oil			Quart,
EAL0036C00A	Label	X	X	First time usage
EAL0037C00A	Label	X	X	Tank Valve Shut-off
EAL0067C00A	Label	X	X	Warnings
EAL0137C00A	Label	X	-	Recycled R-12
EAL0138C00A	Label	-	X	Recycled R-134a
EAL0167C00A	Label	X	X	SUN Model
EAL0168C00A	Label	X	X	Snap-on Model
EAL0169C00A	Label	X	-	SUN Model, R-12 Kool Kare
EAL0170C00A	Label	-	X	SUN Model, R-134a Kool Kare
EAL0171C00A	Label	X	-	Snap-on Model, R-12 Kool Kare
EAL0172C00A	Label	-	X	Snap-on Model, R-134a Kool Kare
EAL0192C00A	Label	X	X	Service Maintenance
EAP0063C00A	Board, CPU	X	X	With High Temp LCD (Serial A)
EAP0063C05A	Board, CPU	X	X	With Low Temp LCD (Serial A)
EAP0063C06A	Board, CPU	X	X	Without LCD Board (Serial A)
EAP0063C07A	Board, CPU	X	X	With Low Temp LCD (Serial B 134a)
EAP0082C00A	Board, LCD	X	X	High Temp Board
EAP0082C05A	Board, LCD	X	X	Low Temp Board
EAP0151L00A	Board, Plumbing	X	X	Serial B R12, Serial C /D R134a (Redundant Circuitry)
EAP0152L00A	Board, CPU	X	X	R12/134a/Serial B & C w/Low Temp.
EASB021A00A	Cabinet, Lower	X	X	
EASB056C15A	Panel, Upper Back	X	X	SUN Model
EASB057C15A	Panel, Lower Back	X	X	SUN Model
EASB058C00A	Panel, Upper Tray	X	X	Snap-on Model
EASB058C15A	Panel, Lower Back	X	X	Snap-on Model
EASC035C00A	Guard, Scale	X	X	
EASD056C00A	Panel, Upper Control	X	X	SUN Model
EASD056C15A	Panel, Upper Back	X	X	SUN Model, Gauge Set Bracket included.
EASD057C00A	Panel, Upper Tray	X	X	SUN Model

WIRING HARNESS PART NUMBERS

PART NUMBER	DESCRIPTION	R-12 KOOL KARE	R-134a KOOL KARE
6004-0826-01	Purge Transducer	X	X
7076-1007-01	DC Power Cable	X	X
7076-1008-02	DC Primary Power	X	X
EAW0004C00A	AC Primary Power	X	X
EAW0005C00A	Solenoids	X	X
EAW0006C00A	Compressor Power	X	X
EAW0007C00A	Switches	X	X
EAW0008C00A	On/Off Switch/Fan	X	X
EAW0009C00A	Grounding	X	X