PANZITTA SALES & SERVICE
72 George Avenue
Wilkes-Barre, PA 18705
570-822-6720 800-822-6720
www.panzittasales.com

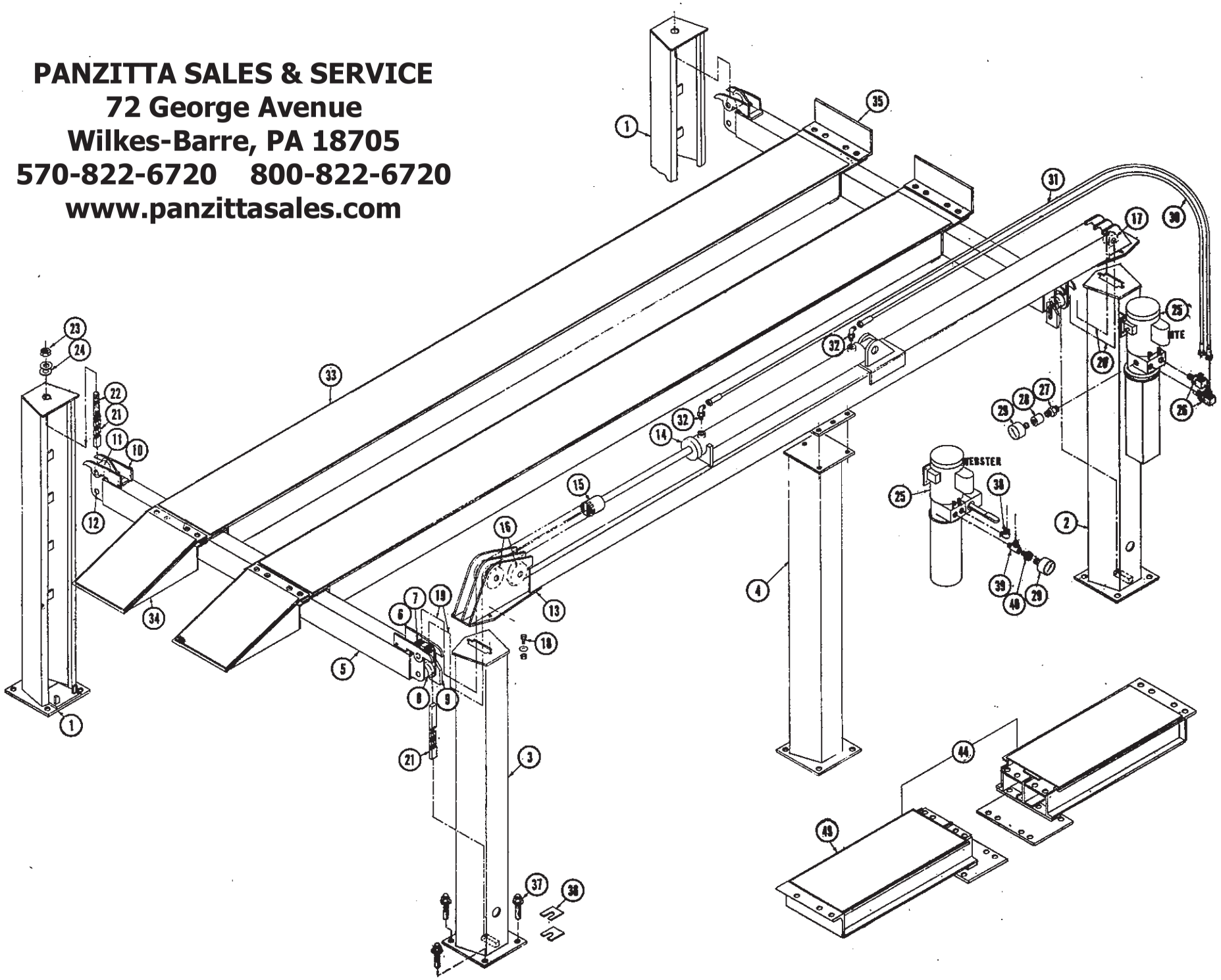

LIFT PARTS
LMT 30

LIFT PARTS
LMT 30

PANZITTA SALES & SERVICE
72 George Avenue
Wilkes-Barre, PA 18705
570-822-6720 800-822-6720
www.panzittasales.com

Code	Part Name	Qty.	Part No.
1	Post Structure - Offside	2	80881
2	Post Structure - Main w/Power Unit Mount	1	81967
3	Post Structure - Main	1	81968
4	Post Structure - Center	1	82127
-	Cross Member Ass'y. (Each Consists Of Codes 5-12)	2	80887
5	Cross Member Structure	1	80888
6	Catch Structure	1	80891
7	Chain Anchor	1	80894
	Bushing	4	80389
	Flat Washer	3 est.	100170
	Hex Screw 3/4-16 NF x 5 Gr. 5	1	80799
	Hex Nut - Nylock 3/4-16 NF Thin	1	80034
	Socket Hd. Screw 5/16-18NC x 5 1/4 (Ch. to Frame)	1	80945
	Hex Nylock Nut 5/16-18NC	1	80064
8	Yoke Roller Ass'y. Consists Of:	1	80892
	1 - 80893 Roller - 2 3/8 Dia.		
	2 - 80815 Bearing - Outer Ring		
	2 - 80816 Bearing - Inner Ring		
9	Trip	1	80391
	Bushing .56	1	80393
	Flat Washer	1	100170
	Hex Screw 3/4-16 NF x 4 Gr. 5	1	80033
	Hex Nut - Nylock 3/4-16 NF Thin	1	80034
10	Catch Structure	1	80891
11	Yoke Roller Ass'y. 2 3/8 Dia.	1	80892
	Flat Washer	1	100170
	Hex Screw 3/4-16 NF x 5 Gr. 5	1	80799
	Hex Nut - Nylock 3/4-16 NF Thin	1	80034
12	Trip	1	80391
	Bushing .56 Thick	1	80393
	Flat Washer	1	100170
	Hex Screw 3/4-16 NF x 1 3/4 Gr. 5	1	80457
	Hex Nut - Nylock 3/4-16 NF Thin	1	80034
13	Upper Horizontal Tube Structure	1	80896
14	Hydraulic Cylinder	1	80817
	Pin - Cylinder	1	80411
	Roll Pin - Cylinder 3/8 x 2	2	100080
	Seal Kit (Replacement Only) Prince	1	82123
15	Chain Connector	1	80936
	Socket Hd. Screw 5/16-18NC x 5 1/4 (Chain)	2	80945
	Hex Nylock Nut 5/16-18NC (Chain)	2	80064
16	Roller Ass'y. Large-Consists Of: (3 Items)	4	80937
	1 - 80938 Roller 4 1/2 Dia.		
	2 - 80815 Bearing - Outer Ring		
	2 - 80816 Bearing - Inner Ring		
	Hex Screw 3/4-16 NC x 6 (Mt.Roller)	2	80838
	Hex Nylock Nut - Thin 3/4-16 NC (Mt. Roller)	2	80034
17	Yoke Roller Ass'y. 2 3/8 Dia.	2	80892
	Hex Screw 3/4-16 NC x 6	1	80838
	Hex Nylock Nut - Thin 3/4-16 NC	1	80034
18	Hex Screw (Hor. Tube to Post) 1/2-13NC x 1 3/4 Gr. 5	7	80453
	Flat Washer	4	100152
	Whiz Nut 1/2-13NC	7	100039
19	Chain - Leaf (Short) 125 Links	2	80943

LIFT PARTS
LMT 30

Code	Part Name		Qty.	Part No.
20	Chain - Leaf (Long) 425 Links		2	80944
#	Cross Chain Assembly Consists Of:		2	81970
21	1 - 81971 Chain			
	1 - 80941 Connecting Link			
22	1 - 80942 Stud - Chain Retainer			
23	1 - 80192 Hex Nut - Nylock 1 1/4 - 12 NF			
	1 - 80063 Soc. Hd. Screw 5/16-18NC x 2 1/2 (To Frame)			
	1 - 80064 Hex Nut - Nylock 5/16-18NC (To Frame)			
24	Flat Washer		8 est.	80431
25	Power Unit - 3 HP - 10	Motor #82372 82904	1	~~80946~~
	Hex Screw (Mt. PU)	5/16-18NC x 7/8	4	100198
	Lock Washer	5/16	4	100159
	Hex Nut	5/16-18NC	4	100102
	Connecting Body	10-3 Wire Ground - 30 Amp	1	80949
26	90° Male Elbow (Mt. PU)	9/16 ORB x 3/4 JIC - MTE	2	82056
27	Pipe Nipple	3/8 NPT x 1/4 NPT - MTE	1	61496
28	Pipe Coupling	1/4 NPT - MTE	1	82066
29	Dry Pressure Gauge		1	80124
	Plastic Tie (Hose)		2	100004
30	Hose Ass'y. 120" Long	1/2 ID Hose	1	80364
31	Hose Ass'y. 180" Long	1/2 ID Hose	1	80365
32	90° Male Elbow	3/4-16 ORB - 3/4-16 JIC	2	80131
33	Track Structure	24" Wide	2	80414
34	Ramp Structure		2	80422
35	Stop- Track		2	80421
	Hex Screw (Ramp & Stop to Track)	3/4 x 2 1/4 Gr. 5	16	80439
	Hex Nut - Nylock 3/4 - 10 NC		16	80427
#	Chock Structure		1	80435
36	Shim Kit		2	80589
37	Anchor Bolt	3/4 x 5	20	80362
38	90° Male Elbow	3/8 NPT - 3/4 JIC - Webster	1	80133
39	Male Branch Tee	3/8 NPT (2) 3/4 JIC (1) WE	1	80132
40	Reducer Bushing	3/8 NPTM - 1/4 NPTF - WE	1	80735
	OPTIONAL EQUIPMENT			
	Kit - Drive Thru Ramps Consists Of:		1	80808
34#	2 - 80422 Ramp Structure			
	8 - 80439 Hex Screw 3/4-10NC x 2 1/4 Gr. 5			
	8 - 80427 Hex Nut 3/4 - 10 NC			
43	Kit 3' Track Extension (2 Sections)		1	80811
44	Kit 6' Track Extension (4 Sections)		1	80440
25#	AC Power Unit 30 - 3 HP - 230v - 3450 RPM - MTE	82905	1	~~82122~~
	Connecting Body 30 - 30 Amp		1	82235
#	NOT SHOWN			

PANZITTA SALES & SERVICE
72 George Avenue
Wilkes-Barre, PA 18705
570-822-6720 800-822-6720
www.panzittasales.com

BILL OF MATERIAL
LMT 30

Code	Part Name		Qty.	Part No.
	Post Structure - Offside		2	80881
	Post Structure - Main w/Power Unit Mount		1	81967
	Post Structure - Main		1	81968
	Post Structure - Center		1	82127
	Cross Member Ass'y.		2	80887
	Upper Horizontal Tube Assembly		1	80895
	Track Structure		2	80414
	Ramp Structure		2	80422
	Stop - Track		2	80421
	Chock Structure		1	80435
	Cross Chain Ass'y. w/Adj. Stud		2	81970
	Chain	93.75" Long	2	80943
	Chain	318.75" Long	2	80944
	3 HP Power Unit 10		1	80946
	90° Male Elbow	Webster	1	80133
	Male Branch Tee	Webster	1	80132
	Connecting Body	10	1	80949
	Hose Assembly	120" Long	1	80364
	Hose Assembly	180" Long	1	80365
	Dry Pressure Gauge	1/4 NPT Stem	1	80124
	Reducer Bushing NPT	3/8 x 1/4 Webster	1	80735
	90° ORB Male Elbow (For Cylinder)		2	80131
	Shim Kit		2	80589
	Plastic Tie	Hose	2	100004
	Anchor Bolt	3/4-10 NC x 5	20	80362
	Hex Screw	5/16-18 NC x 7/8 Motor Mt.	4	100198
	Lock Washer	5/16 Motor Mount	4	100159
	Hex Nut	5/16-18 NC Motor Mount	4	100102
	Hex Screw	3/4-10NC x 2 1/4 Gr. 5	16	80439
	Hex Nut - Nylock	3/4-10NC Ramp & Stop	16	80427
	Flat Washer	1 5/16 ID Cross Chain	8	80431
	Operator's Manual		1	81336
	90° Male Elbow (Mt. to PU) 9/16 ORB x 3/4 JIC - MTE		2	82056
	Pipe Nipple	3/8 NPT x 1/4 NPT - MTE	1	61496
	Pipe Coupling	1/4 NPT - MTE	1	82066
	Straight Adapter - ORB	(Not Used This Model)	1	82057
	Plug - ORB	(Not Used This Model)	1	100026

PANZITTA SALES & SERVICE
72 George Avenue
Wilkes-Barre, PA 18705
570-822-6720 800-822-6720
www.panzittasales.com