BLACKHAWK

PANZITTA SALES & SERVICE
72 George Avenue
Wilkes-Barre, PA 18705
570-822-6720 800-822-6720
www.panzittasales.com

Repair Parts Information

Wheel Dollies

MODELS WD-20 & WD-30

Serial Codes B

CAPACITY:
WD-20 1500 LBS.
WD-30 2600 LBS.

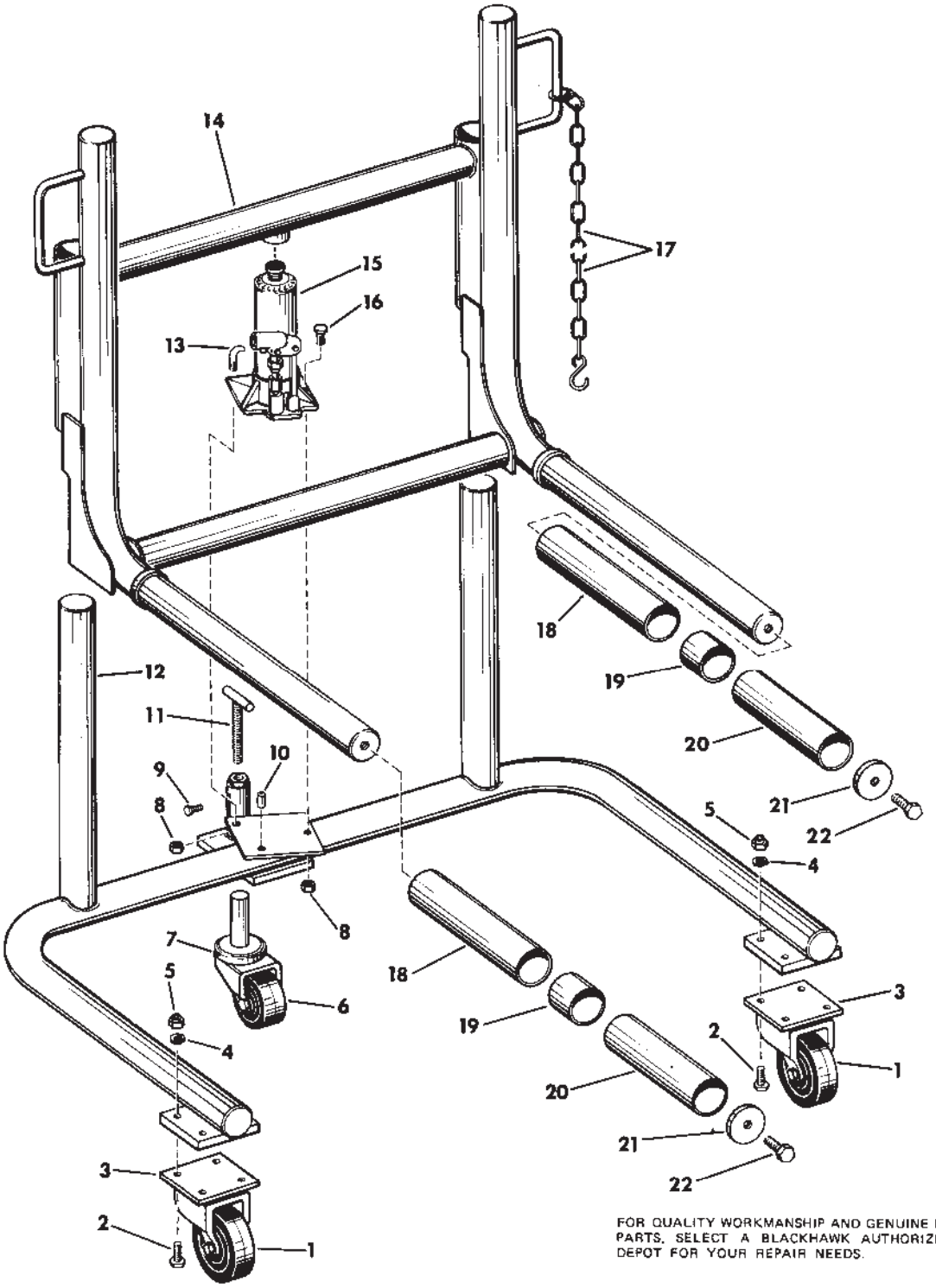

FOR QUALITY WORKMANSHIP AND GENUINE BLACKHAWK PARTS, SELECT A BLACKHAWK AUTHORIZED SERVICE DEPOT FOR YOUR REPAIR NEEDS.

USE ONLY LX-21 JACK OIL AND GENUINE FACTORY PARTS. USE OF OTHER HYDRAULIC FLUIDS OR NON-GENUINE PARTS VOIDS WARRANTY.

NEVER USE BRAKE FLUID.

PANZITTA SALES & SERVICE
72 George Avenue
Wilkes-Barre, PA 18705
570-822-6720 800-822-6720
www.panzittasales.com

REPAIR PARTS LIST FOR MODELS WD-20 AND WD-30

Item No.	WD-20 Part No.	No. Req.	WD-30 Part No.	No. Req.	Description
1	E194.106	2	E194.106	2	Wheel Only
2	D677.028	8	D677.028	8	Bolt
3	E187.154	2	E187.154	2	Caster w/Wheel
4	S4.139	8	S4.139	8	Washer
5	D891.055	8	D891.055	8	Nut
6	E193.106	1	E193.106	1	Wheel Only
7	WD30.10	1	WD30.10	1	Caster w/Wheel
8	SJ100.079	2	SJ100.079	2	Nut
9	W1.488	1	W1.488	1	Bolt
10	SJ100.076	1	SJ100.076	1	Pin
11	W14.900	1	W14.900	1	Screw
12	Carriage Not Available as Repair Part				
13	B872.028	1	B872.028	1	Bolt
14	Fork Not Available as Repair Part				
*15	TC7	1	BA85	1	Hydraulic Jack
16	B874.028	1	B874.028	1	Bolt
17	W12.900	1	W12.900	1	Chain
18	W21.492	2	W21.492	4	Sleeve, 11"
19	W19.492	2	W19.492	2	Sleeve, 2¼"
20	W20.492	2			Sleeve, 9"
21	W11.108	2	W11.108	2	Washer
22	W42.488	2	W42.488	2	Bolt
†23	H-12	1	H-12	1	Handle
†24	K328.026	1	K328.026		Decal (Repair)

†Not Shown.
**For Jack Replacement Parts, Refer to Part Sheet PS-423.*